40Gb/s QSFP Active Copper Cable
Parallel 4x10Gb/s data transmission
10/13/15 meters transmission distance available

AB-40GQSFP-AC-xx
Ver. A

Feature

- Compliant QSFP MSA specifications
- Hot pluggable QSFP active cable assembly
- Proven Link length up to 15meters over 26AWG cables
- Single 3.3V power supply, low power consumption, <1.5W
- 4 independent duplex channels operating at 10G, also support for 2.5G, 5G data rates
- All-metal housing for superior EMI performance, low Near-End Crosstalk (NEXT)
- Precision process control for minimization of pair-to-pair skew
- Pull-to-release latch for easy installation
- Operating case temperature: -40 to 85°C
- RoHS compliant

Application

- InfiniBand - 2.5G SDR, 5G DDR, 10G QDR
- Computer cluster cross-connect
- Switches, Routers, and HBA's
- Enterprise Data Center
- High Performance Computing (HPC) & Storage

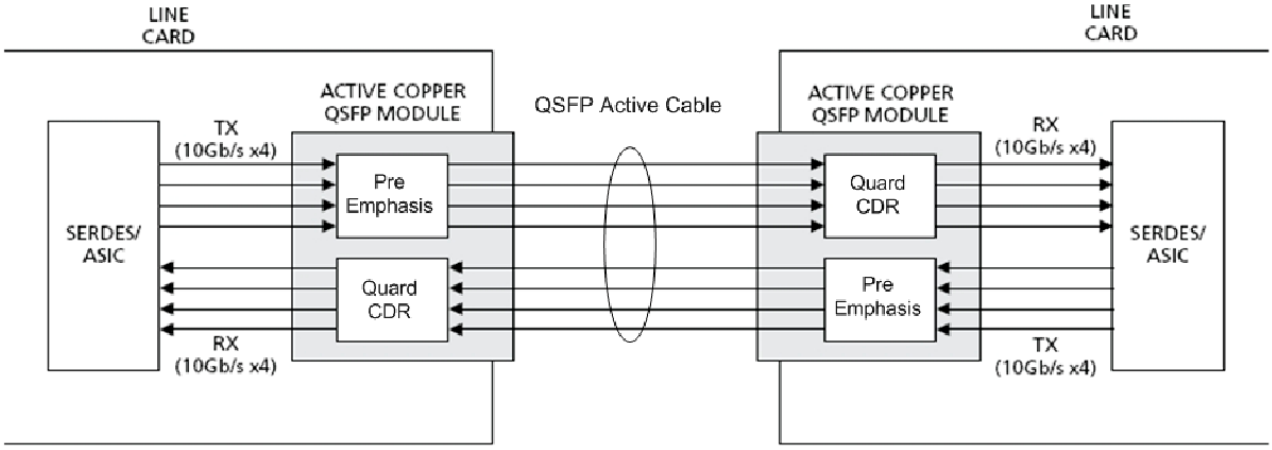

Figure1: Application in System

AIBAO reserves the right to make changes in the specification described hereinafter without prior notice.

AIBAO INTERNATIONAL LTD.
No.77, Shengli 6th St., Jhubei City,
Hsinchu County 302, Taiwan R.O.C.
Tel: +886-3-657-6363 Fax: +886-3-657-6963
http://www.aibaotech.com

1. General Description

The Aibaotech AB-40GQSFP-AC-xx series is specifically designed to allow the end-user an active cable connection solution between ports based on QSFP connectivity, respectively. The cable is plug-and-play into these powered ports and provides the customer with all the advantages of a cost effective & easy to handle high speed connection. The transmitter side accepts electrical input signals which are voltage compatible with both Low Voltage Positive Emitter Coupled Logic (LVPECL) and Current Mode Logic (CML) levels. All input data signals are differential and are internally terminated. The receiver side recovered the parallel electrical input signals via a quad CDR into clear-edge parallel electrical output signals. The outputs electrical signals of receive side are voltage compatible with Current Mode Logic (CML) levels. All data signals are differential and support a data rates up to 10Gb per channel. All transmitter signals and receiver signals are AC coupled internally on both modules ends.

The figure on the next page, presents a detailed functional block diagram of the QSFP module with corresponding external connection pins.

A single +3.3V power supply is required to power up the module. Both power supply pins VccTx and VccRx are internally connected and should be applied concurrently. As per MSA specifications the module offers 7 low speed hardware control pins (including the 2-wire serial interface): ModSelL, SCL, SDA, ResetL, LPMode, ModPrsL and IntL.

Module Select (ModSelL) is an input pin. When held low by the host, the module responds to 2-wire serial communication commands. The ModSelL allows the use of multiple QSFP modules on a single 2-wire interface bus – individual ModSelL lines for each QSFP module must be used.

Serial Clock (SCL) and Serial Data (SDA) are required for the 2-wire serial bus communication interface and enable the host to access the QSFP memory map.

The ResetL pin enables a complete module reset, returning module settings to their default state, when a low level on the ResetL pin is held for longer than the minimum pulse length. During the execution of a reset the host shall disregard all status bits until the module indicates a completion of the reset interrupt. The module indicates this by posting an IntL (Interrupt)

AIBAO INTERNATIONAL LTD.
No.77, Shengli 6th St., Jhubei City,
Hsinchu County 302, Taiwan R.O.C.
Tel: +886-3-657-6363 Fax: +886-3-657-6963
http://www.aibaotech.com

signal with the Data_Not_Ready bit negated in the memory map. Note that on power up (including hot insertion) the module should post this completion of reset interrupt without requiring a reset.

Low Power Mode (LPMode) pin is used to set the maximum power consumption for the module in order to protect hosts that are not capable of cooling higher power modules, should such modules be accidentally inserted.

Module Present (ModPrsL) is a signal local to the host board which, in the absence of a module, is normally pulled up to the host Vcc. When a module is inserted into the connector, it completes the path to ground though a resistor on the host board and asserts the signal. ModPrsL then indicates a module is present by setting ModPrsL to a “Low” state.

Interrupt (IntL) is an output pin. When “Low”, it indicates a possible module operational fault or a status critical to the host system. The host identifies the source of the interrupt using the 2-wire serial interface. The IntL pin is an open collector output and must be pulled to the Host Vcc voltage on the Host board.

AIBAO reserves the right to make changes in the specification described hereinafter without prior notice.

AIBAO INTERNATIONAL LTD.
No.77, Shengli 6th St., Jhubei City,
Hsinchu County 302, Taiwan R.O.C.
Tel: +886-3-657-6363 Fax: +886-3-657-6963
http://www.aibaotech.com

2. QSFP Copper Design Structure

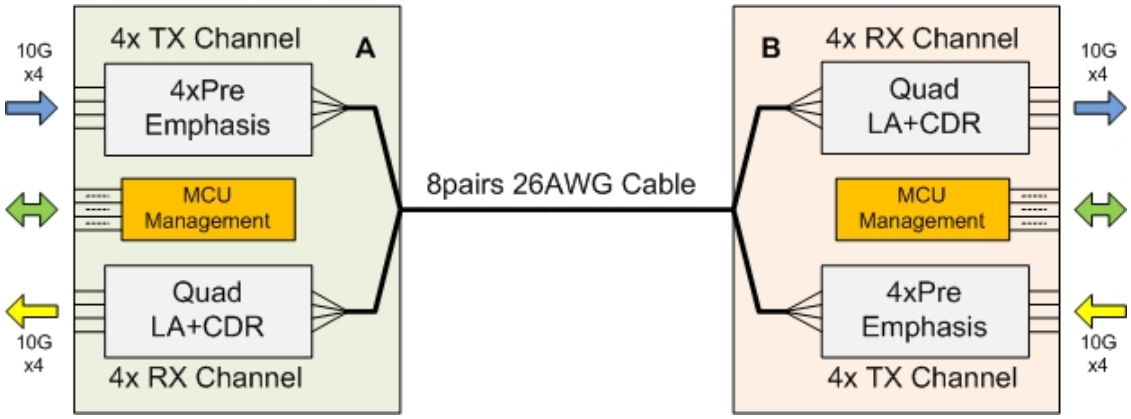

The Aibaotech AB-40GQSFP-AC-xx series active copper cable includes one pair(A-B) QSFP modules connected by 26AWG cable which have 8pairs differential cables inside, the cable lengths are 10M, 13M to 15M, three different types.

3. Absolute Maximum Rating

Parameter	Symbol	Min	Max	Unit	Note
Storage Temperature	Tst	-40	125	°C	
Relative Humidity (non-condensation)	RH	-	85	%	
Operating Case Temperature	Topc	-40	85	°C	1
Supply Voltage	VCC3	-0.3	3.6	V	
Voltage on LVTTL Input	Vilvttl	-0.3	VCC3+0.2	V	

NOTE 1: Stress above those listed under Absolute Maximum Ratings may cause permanent damage to the device. This is a stress rating only and functional operation of the device at these or any other conditions above those listed in the operational sections of this specification is not applied. Exposure to absolute maximum rating conditions for extended periods may affect device reliability.

AIBAO reserves the right to make changes in the specification described hereinafter without prior notice.

AIBAO INTERNATIONAL LTD.
No.77, Shengli 6th St., Jhubei City,
Hsinchu County 302, Taiwan R.O.C.
Tel: +886-3-657-6363 Fax: +886-3-657-6963
http://www.aibaotech.com

4. Recommended Operating Conditions And Supply Requirements

Parameter	Symbol	Min	Max	Unit
Operating Case Temperature	Topc	-40	85	°C
Relative Humidity (non-condensing)	Rhop	-	85	%
Power Supply Voltage	VCC3	3.135	3.465	V
Power Supply Current	ICC3	-	750	mA
Total Power Consumption	Pd	-	2.0	W

5. Order Information

Part Number	IB - SDR, DDR, QDR	Cable Distance
AB-40GQSFP-AC-10	Support	10 meters
AB-40GQSFP-AC-13	Support	13 meters
AB-40GQSFP-AC-15	Support	15 meters

6. DC Low Speed Control And Alarm Signals Electrical Interface

Parameter	Conditions	Symbol	Min	Typ	Max	Units
Supply Current	@ VCCT	IVCC		420	500	mA
Power Consumption				1.4	1.65	W
ModPrsl and IntL	Host Vcc Range 2V – 3.47V	VOL	0		0.4	V
		VOH	Host_Vcc – 0.5		Host_V cc + 0.3	
LPMode, Reset, ModeSelL	Low Voltage TTL	VIL	0.3		0.8	
		VIH	2		VccT + 0.3	
SCL, SDA	Host Vcc Range 3.14V – 3.47V	VIL	0.3		VccT*0 .3	
		VIH	VccT*0 .7		VccT + 0.5	
		VOL	0		0.4	
		VOH	Host_Vcc – 0.5		Host_Vcc + 0.3	

AIBAO reserves the right to make changes in the specification described hereinafter without prior notice.

Aibaotech

AIBAO INTERNATIONAL LTD.
No.77, Shengli 6th St., Jhubei City,
Hsinchu County 302, Taiwan R.O.C.
Tel: +886-3-657-6363 Fax: +886-3-657-6963
http://www.aibaotech.com

7. Module Transmitter Single Channel Input Characteristics

Parameter	Conditions	Symbol	Min	Typ	Max	Units
Nominal Data Rate		VID	2.49	10	11.3	Gbps
Reference Differential Input Impedance		Zd	80	100	120	Ω
Input AC Common Mode Input Voltage			0		20	Mv (RMS)
Differential Input Voltage Swing		VID	100		1200	mV

8. Module Receiver Single Channel Output Characteristics

Parameter	Conditions	Symbol	Min	Typ	Max	Units
Nominal Data Rate				5		Gbd
Reference Differential Output Impedance		Zd		100		Ω
Differential Output Amplitude	RLoad = 100Ohm, Differential	VOSPP	370		800	mV
Output Rise & Fall time	20% to 80%	tRH, tFH	30		50	ps
Receiver Output Deterministic Jitter		DJ			10	ps
Receiver Output Total Jitter		TJ			25	ps

AIBAO reserves the right to make changes in the specification described hereinafter without prior notice.

AIBAO INTERNATIONAL LTD.
No.77, Shengli 6th St., Jhubei City,
Hsinchu County 302, Taiwan R.O.C.
Tel: +886-3-657-6363 Fax: +886-3-657-6963
http://www.aibaotech.com

9. Pin Assignments and Descriptions

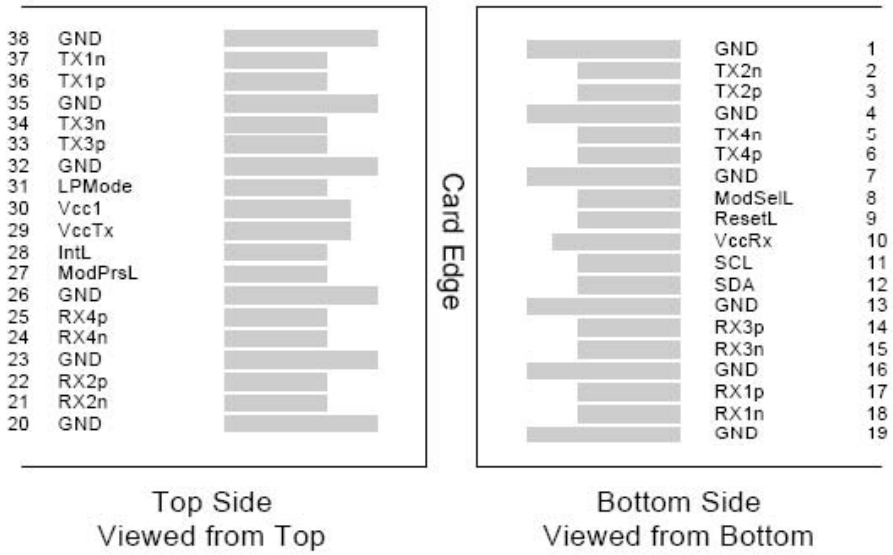

PIN	Logic	Symbol	Name / Description	Note
1		GND	Ground	1
2	CML-I	Tx2n	Transmitter Inverted Data Input	
3	CML-I	Tx2p	Transmitter Non-Inverted Data output	
4		GND	Ground	1
5	CML-I	Tx4n	Transmitter Inverted Data Input	
6	CML-I	Tx4p	Transmitter Non-Inverted Data output	
7		GND	Ground	1
8	LVTLL-I	ModSelL	Module Select	
9	LVTLL-I	ResetL	Module Reset	
10		Vcc Rx	+ 3.3V Power Supply Receiver	2
11	LVCMOS-I/O	SCL	2-Wire Serial Interface Clock	
12	LVCMOS-I/O	SDA	2-Wire Serial Interface Data	
13		GND	Ground	
14	CML-O	Rx3p	Receiver Non-Inverted Data Output	
15	CMLO	Rx3n	Receiver Inverted Data Output	
16		GND	Ground	1

AIBAO reserves the right to make changes in the specification described hereinafter without prior notice.

AIBAO INTERNATIONAL LTD.
No.77, Shengli 6th St., Jhubei City,
Hsinchu County 302, Taiwan R.O.C.
Tel: +886-3-657-6363 Fax: +886-3-657-6963
http://www.aibaotech.com

17	CMLO	Rx1p	Receiver NonInverted Data Output	
18	CMLO	Rx1n	Receiver Inverted Data Output	
19		GND	Ground	1
20		GND	Ground	1
21	CMLO	Rx2n	Receiver Inverted Data Output	
22	CMLO	Rx2p	Receiver NonInverted Data Output	
23		GND	Ground	1
24	CMLO	Rx4n	Receiver Inverted Data Output	1
25	CMLO	Rx4p	Receiver NonInverted Data Output	
26		GND	Ground	1
27	LVTTLO	ModPrsL	Module Present	
28	LVTTLO	IntL	Interrupt	
29		Vcc Tx	+3.3 V Power Supply transmitter	2
30		Vcc1	+3.3 V Power Supply	2
31	LVTTLI	LPMode	Low Power Mode	
32		GND	Ground	1
33	CMLI	Tx3p	Transmitter NonInverted Data Input	
34	CMLI	Tx3n	Transmitter Inverted Data Output	
35		GND	Ground	1
36	CMLI	Tx1p	Transmitter NonInverted Data Input	
37	CMLI	Tx1n	Transmitter Inverted Data Output	
38		GND	Ground	1

1. GND is the symbol for signal and supply (power) common for QSFP modules. All are common within the QSFP module and all module voltages are referenced to this potential otherwise noted. Connect these directly to the host board signal common ground plane.

2. Vcc Rx, Vcc1 and Vcc Tx are the receiver and transmitter power suppliers and shall be applied concurrently. Recommended host board power supply filtering is shown below. Vcc Rx, Vcc1 and Vcc Tx may be internally connected within the QSFP transceiver module in any combination. The connector pins are each rated for a maximum current of 500mA.

AIBAO reserves the right to make changes in the specification described hereinafter without prior notice.

Aibaotech
AIBAO INTERNATIONAL LTD.
No.77, Shengli 6th St., Jhubei City,
Hsinchu County 302, Taiwan R.O.C.
Tel: +886-3-657-6363 Fax: +886-3-657-6963
http://www.aibaotech.com

10. Recommended power supply filtering Example of QSFP Host board schematics

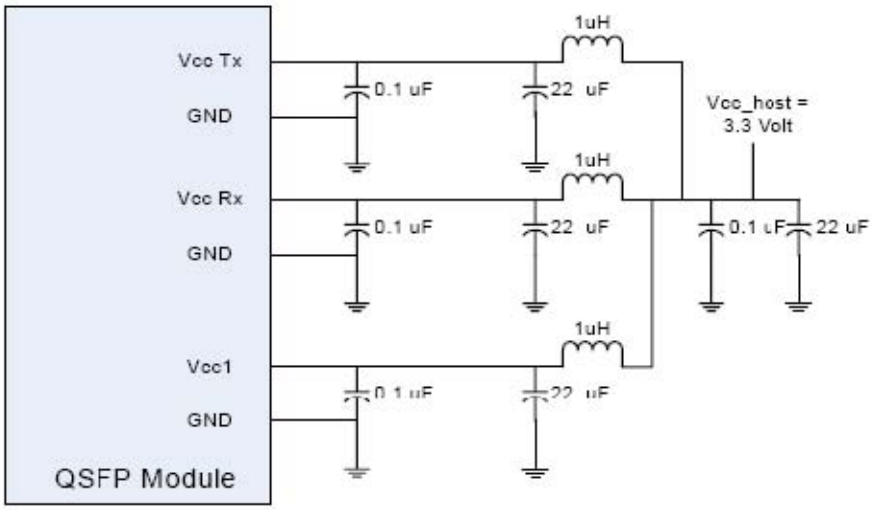

11. QSFP Copper Module Outline for System Design

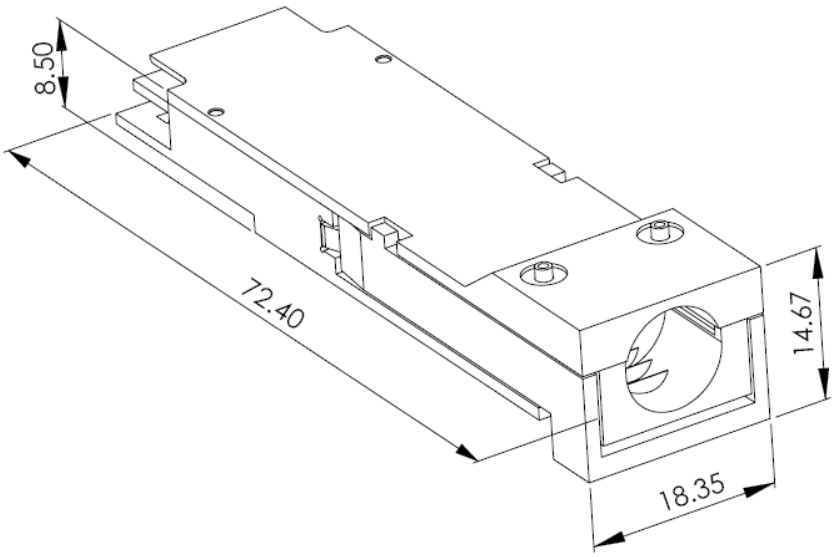

AIBAO reserves the right to make changes in the specification described hereinafter without prior notice.

AIBAO INTERNATIONAL LTD.
No.77, Shengli 6th St., Jhubei City,
Hsinchu County 302, Taiwan R.O.C.
Tel: +886-3-657-6363 Fax: +886-3-657-6963
http://www.aibaotech.com