10Gb/s SFP+ ER
1550nm Cooled EML with TEC, PIN Receiver
40km transmission distance

AB-SFP+-ER
Ver. A

Feature

- 10Gb/s serial optical interface compliant to 802.3ae 10GBASE-ER/EW
- Electrical interface compliant to SFF-8431 specifications for enhanced 8.5 and 10 Gigabit small form factor pluggable module "SFP+"
- 1550nm cooled EML transmitter with TEC, PIN photo-detector
- 2-wire interface for management specifications compliant with SFF 8472 digital diagnostic monitoring interface for optical transceivers
- Operating case temperature: 0 to 70°C
- All-metal housing for superior EMI performance
- Low power consumption, less than 1.5w
- Advanced firmware allow customer system encryption information to be stored in transceiver
- Cost effective SFP+ solution, enables higher port densities and greater bandwidth

Application

- 10GBASE-ER/EW
- 10GBASE-ER/EW + FEC
- 40km 10G Fibre Channel
- 40km 10G Fibre Channel + FEC

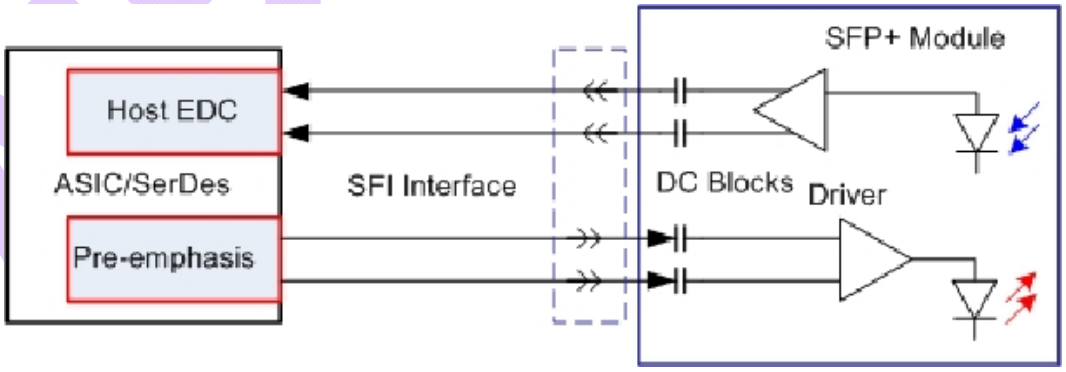

Figure1: Application in System

AIBAO reserves the right to make changes in the specification described hereinafter without prior notice.

AIBAO INTERNATIONAL LTD.
No.77, Shengli 6th St., Jhubei City,
Hsinchu County 302, Taiwan R.O.C.
Tel: +886-3-657-6363 Fax: +886-3-657-6963
http://www.aibaotech.com

AIBAOTECH

1. GENERAL DESCRIPTION

This 1550nm cooled EML laser based 10Gigabit SFP+ transceiver is designed to transmit and receive optical data over single mode optical fiber for link length up to 40km.

The SFP+ ER module electrical interface is compliant to SFI electrical specifications. The transmitter input and receiver output impedance is 100 Ohms differential. Data lines are internally AC coupled. The module provides differential termination and reduce differential to common mode conversion for quality signal termination and low EMI. SFI typically operates over 200 mm of improved FR4 material or up to about 150mmof standard FR4 with one connector.

The transmitter converts 10Gbit/s serial PECL or CML electrical data into serial optical data compliant with the 10GBASE-ER standard. An open collector compatible Transmit Disable (Tx_Dis) is provided. A logic “1,” or no connection on this pin will disable the laser from transmitting. A logic “0” on this pin provides normal operation. The transmitter has an internal automatic power control loop (APC) to ensure constant optical power output across supply voltage and temperature variations. An open collector compatible Transmit Fault (TFault) is provided. TX_Fault is a module output contact that when high, indicates that the module transmitter has detected a fault condition related to laser operation or safety. The TX_Fault output contact is an open drain/collector and shall be pulled up to the Vcc_Host in the host with a resistor in the range 4.7-10 kΩ. TX_Disable is a module input contact. When TX_Disable is asserted high or left open, the SFP+ module transmitter output shall be turned off. This contact shall be pulled up to VccT with a 4.7 kΩ to 10 kΩ resistor

The receiver converts 10Gbit/s serial optical data into serial PECL/CML electrical data. An open collector compatible Loss of Signal is provided. Rx_LOS when high indicates an optical signal level below that specified in the relevant standard. The Rx_LOS contact is an open drain/collector output and shall be pulled up to Vcc_Host in the host with a resistor in the range 4.7-10 kΩ, or with an active termination. Power supply filtering is recommended for both the transmitter and receiver. The Rx_LOS signal is intended as a preliminary indication to the system in which the SFP+ is installed that the received signal strength is below the specified range. Such an indication typically points to non-installed cables, broken cables, or a disabled, failing or a powered off transmitter at the far end of the cable.

AIBAOTECH

AIBAO reserves the right to make changes in the specification described hereinafter without prior notice.

Aibaotech
AIBAO INTERNATIONAL LTD.
No.77, Shengli 6th St., Jhubei City,
Hsinchu County 302, Taiwan R.O.C.
Tel: +886-3-657-6363 Fax: +886-3-657-6963
http://www.aibaotech.com

2. PROPOSED APPLICATION SCHEMATICS

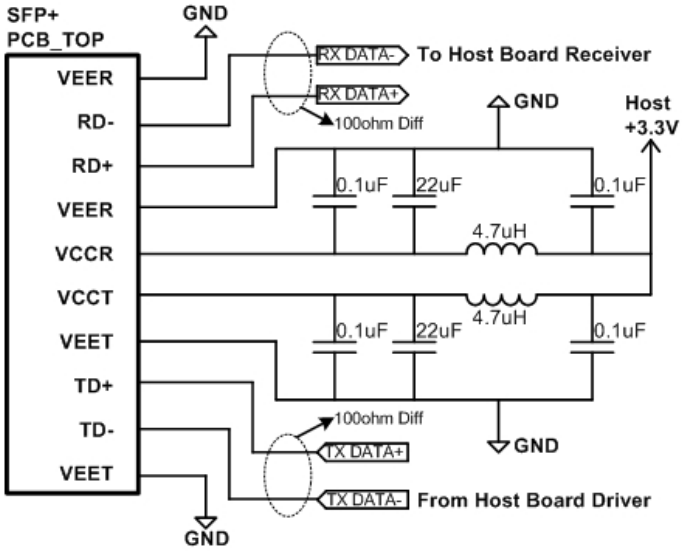

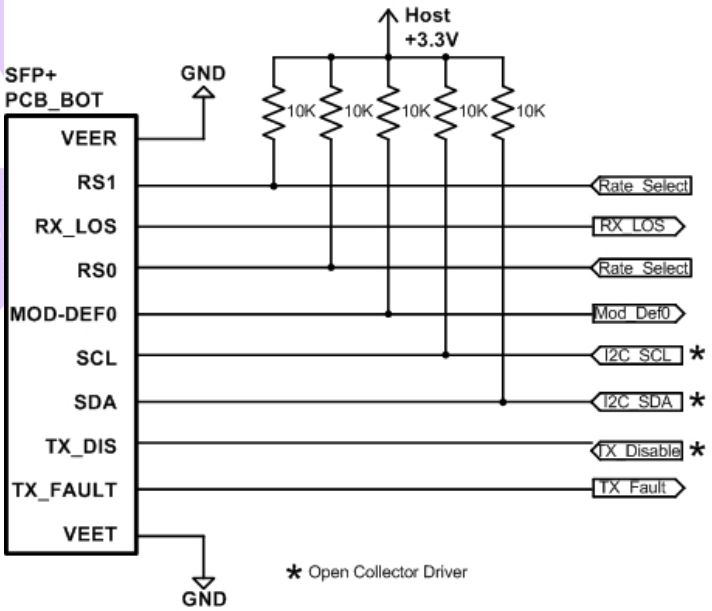

AIBAO reserves the right to make changes in the specification described hereinafter without prior notice.

Aibaotech

AIBAO INTERNATIONAL LTD.
No.77, Shengli 6th St., Jhubei City,
Hsinchu County 302, Taiwan R.O.C.
Tel: +886-3-657-6363 Fax: +886-3-657-6963
http://www.aibaotech.com

3. PIN DEFINITION

The SFP+ modules are hot-pluggable. Hot pluggable refers to plugging in or unplugging a module while the host board is powered. The SFP+ host connector is a 0.8 mm pitch 20 position right angle improved connector specified by SFF-8083, or stacked connector with equivalent with equivalent electrical performance. Host PCB contact assignment is shown in Figure 2 and contact definitions are given in Table 2. SFP+ module contacts mates with the host in the order of ground, power, followed by signal as illustrated by Figure 3 and the contact sequence order listed in Table 2.

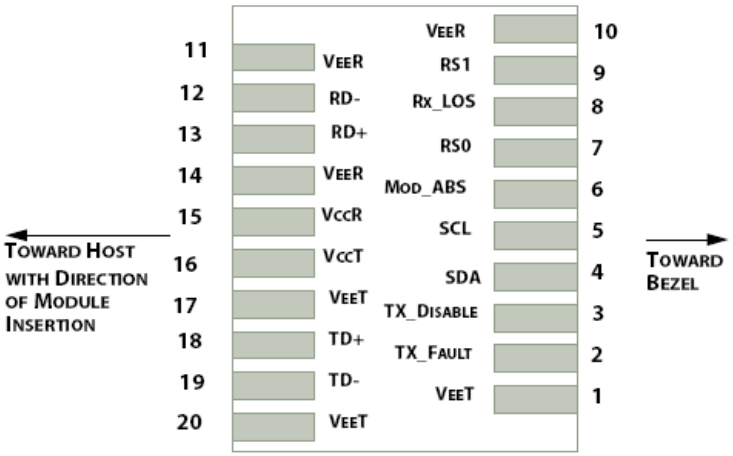

Figure 2: Module Interface to Host

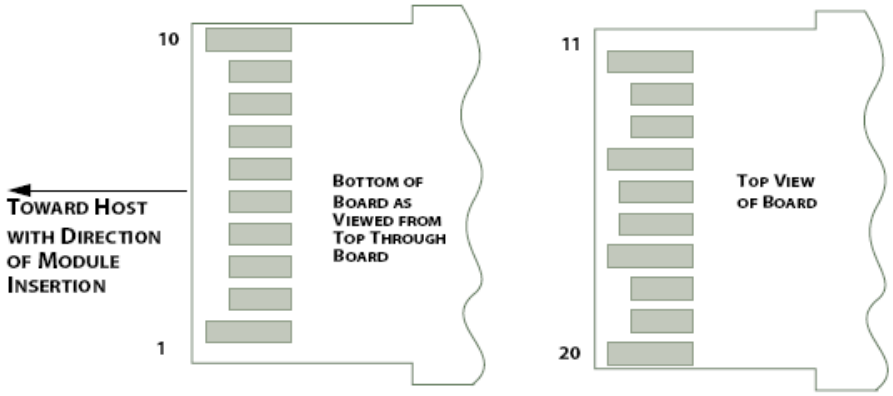

Figure 3: Module Contact Assignment

AIBAO reserves the right to make changes in the specification described hereinafter without prior notice.

AIBAO INTERNATIONAL LTD.
No.77, Shengli 6th St., Jhubei City,
Hsinchu County 302, Taiwan R.O.C.
Tel: +886-3-657-6363 Fax: +886-3-657-6963
http://www.aibaotech.com

PIN	Logic	Symbol	Name / Description	Note
1		VeeT	Module Transmitter Ground	1
2	LVTTL-O	TX_Fault	Module Transmitter Fault	
3	LVTTL-I	TX_Dis	Transmitter Disable; Turns off transmitter laser output	
4	LVTTL-I/O	SDA	2-Wire Serial Interface Data Line	2
5	LVTTL-I	SCL	2-Wire Serial Interface Clock	2
6		MOD_DEF0	Module Definition, Grounded in the module	
7	LVTTL-I	RS0	Receiver Rate Select	
8	LVTTL-O	RX_LOS	Receiver Loss of Signal Indication Active LOW	
9	LVTTL-I	RS1	Transmitter Rate Select (not used)	
10		VeeR	Module Receiver Ground	1
11		VeeR	Module Receiver Ground	1
12	CML-O	RD-	Receiver Inverted Data Output	
13	CML-O	RD+	Receiver Data Output (not used)	
14		VeeR	Module Receiver Ground	1
15		VccR	Module Receiver 3.3 V Supply	
16		VccT	Module Receiver 3.3 V Supply	
17		VeeT	Module Transmitter Ground	1
18	CML-I	TD+	Receiver Non-Inverted Data Output	
19	CML-I	TD-	Transmitter Inverted Data Input	
20		VeeT	Module Transmitter Ground	1

Note:

1. Module ground pins GND are isolated from the module case.
2. Shall be pulled up with 4.7K-10Kohms to a voltage between 3.15V and 3.45V on the host board.

Table 1: SFP+ Module PIN Definition

AIBAO reserves the right to make changes in the specification described hereinafter without prior notice.

AIBAO INTERNATIONAL LTD.
No.77, Shengli 6th St., Jhubei City,
Hsinchu County 302, Taiwan R.O.C.
Tel: +886-3-657-6363 Fax: +886-3-657-6963
http://www.aibaotech.com

4. TRANSCEIVER BLOCK DIAGRAM

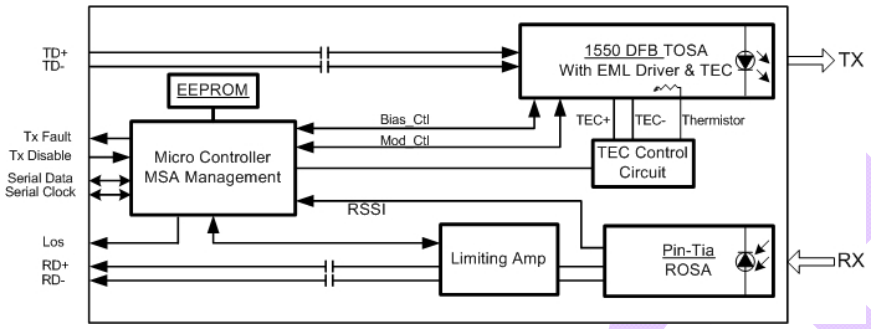

5. ABSOLUTE MAXIMUM RATING

These values represent the damage threshold of the module. Stress in excess of any of the individual Absolute Maximum Ratings can cause immediate catastrophic damage to the module even if all other parameters are within Recommended Operating Conditions.

Parameters	Symbol	Min.	Max.	Unit
Power Supply Voltage	V_{CC}	0	3.6	V
Storage Temperature	Tc	-40	85	°C
Operating Case Temperature	Tc	0	70	°C
Relative Humidity	RH	5	95	%
RX Input Average Power	Pmax	-	0	dBm

Table 2: Absolute Maximum Rating

6. RECOMMENDED OPERATING ENVIRONMENT

Recommended Operating Environment specifies parameters for which the electrical and optical characteristics hold unless otherwise noted.

Parameters	Symbol	Min.	Typical	Max	Unit
Power Supply Voltage	V_{CC}	3.135	3.3	3.465	V
Operating Case Temperature	T_C	0	25	70	°C

Table 3: Recommended Operating Environment

AIBAO reserves the right to make changes in the specification described hereinafter without prior notice.

AIBAO INTERNATIONAL LTD.
No.77, Shengli 6th St., Jhubei City,
Hsinchu County 302, Taiwan R.O.C.
Tel: +886-3-657-6363 Fax: +886-3-657-6963
http://www.aibaotech.com

AIBAOTECH

7. OPTICAL CHARACTERISTICS

The following optical characteristics are defined over the Recommended Operating Environment unless otherwise specified.

Parameters	Values	Unit
Operating Reach(SMF)	40K	m
Transmitter		
Center wavelength (range)	1530 -1565	nm
Side Mode Suppression Ratio (min)	30	dB
Launched power		
– maximum (Average)	3.0	dBm
– minimum (Average)	-3.0	dBm
– OMA(Minimum)	-2.1	dBm
Transmitter and dispersion penalty (max)	2.0	dB
Average launch power of OFF transmitter (max)	-30	dBm
Extinction ratio (min)	6.0	dB
RIN12 OMA (max)	-128	dB/Hz
Optical Return Loss Tolerance (min)	21	dB
Receiver		
Center wavelength (range)	1530-1565	nm
Receive overload (max) in average power(note 1)	-1.0	dBm
Receive sensitivity (min) in average power(note 1)	-15.8	dBm
Receiver sensitivity (max) in OMA (note 2)	-14.1	dBm
Receiver Reflectance (max)	-26	dB
Stressed receiver sensitivity (max) in OMA(note 2)	-11.3	dBm
Vertical eye closure penalty (min)(note 3)	2.7	dB
Los Assert(min)	-25	dBm
Los Dessert(max)	-16	dBm
Los Hysteresis(min)	0.5	dB
Stressed eye jitter (min)(note 2)	0.3	UIp-p

AIBAO reserves the right to make changes in the specification described hereinafter without prior notice.

AIBAO INTERNATIONAL LTD.
No.77, Shengli 6th St., Jhubei City,
Hsinchu County 302, Taiwan R.O.C.
Tel: +886-3-657-6363 Fax: +886-3-657-6963
http://www.aibaotech.com

Receive electrical 3dB upper cutoff frequency (max)	12.3	GHz
Receiver power (damage, Max)	5.0	dBm

Notes:

1. Average optical power shall be measured using the methods specified in TIA/EIA-455-95.
2. Receiver sensitivity is informative. Stressed receiver sensitivity shall be measured with conformance test signal for BER =1x 10^{-12} .
3. Vertical eye closure penalty and stressed eye jitter are the test conditions for measuring stressed receiver sensitivity. They are not the required characteristic of the receiver.
4. Power budget is defined as the different between the Rx sensitivity and the Tx output power of the interface.
5. Path penalty is intended as the power penalty of the interface between back-to-back and the maximum applied dispersion.

Table 4: Optical Characteristics

8. DIGITAL DIAGNOSTIC FUNCTIONS

The following digital diagnostic characteristics are defined over the Recommended Operating Environment unless otherwise specified. It is compliant to SFF8472 Rev10.2 with internal calibration mode. For external calibration mode please contact our sales stuff.

Parameter	Symbol	Min.	Max	Unit	Notes
Temperature monitor absolute error	DMI_Temp	-2.5	2.5	degC	Over operating temp
Laser power monitor absolute error	DMI_TX	-2.5	2.5	dB	
RX power monitor absolute error	DMI_RX	-2.5	2.5	dB	-1dBm to -15dBm range
Supply voltage monitor absolute error	DMI_VCC	-0.08	0.08	V	Full operating range
Bias current monitor	DMI_Ibias	-10%	10%	mA	

Table 5: Digital diagnostic specification table

AIBAOTECH

Aibaotech
AIBAO INTERNATIONAL LTD.
No.77, Shengli 6th St., Jhubei City,
Hsinchu County 302, Taiwan R.O.C.
Tel: +886-3-657-6363 Fax: +886-3-657-6963
http://www.aibaotech.com

9. ELECTRICAL CHARACTERISTICS

The following electrical characteristics are defined over the Recommended Operating Environment unless otherwise specified.

Parameter	Symbol	Min.	Typical	Max	Unit	Notes
Data Rate		-	10.3125	11.3	Gbps	NRZ
Power Consumption		-	1200	1500	mW	
Transmitter						
Single Ended Output Voltage Tolerance		-0.3	-	4	V	
C common mode voltage tolerance		15	-	-	mV	
Tx Input Diff Voltage	VI	90		350	mV	
Tx Fault	VoL	-0.3		0.4	V	At 0.7mA
Data Dependent Input Jitter	DDJ			0.1	UI	
Data Input Total Jitter	TJ			0.28	UI	
Receiver						
Single Ended Output Voltage Tolerance		-0.3	-	4	V	
Rx Output Diff Voltage	Vo	150		425	mV	
Rx Output Rise and Fall Time	Tr/Tf	30			ps	20% to 80%
Total Jitter	TJ			0.7	UI	
Deterministic Jitter	DJ			0.42	UI	

Table 6: Electrical Characteristics

AIBAOTECH

AIBAO reserves the right to make changes in the specification described hereinafter without prior notice.

Aibaotech
AIBAO INTERNATIONAL LTD.
No.77, Shengli 6th St., Jhubei City,
Hsinchu County 302, Taiwan R.O.C.
Tel: +886-3-657-6363 Fax: +886-3-657-6963
http://www.aibaotech.com

10. CONTROL AND STATUS I/O TIMING CHARACTERISTICS

Timing characteristics of control and status I/O are included in Table 8, which is also defined in SFF-8431.

Parameter	Symbol	Min	Max	Unit	Condition
TX Disable Assert Time	t_off		10	µs	Time from rising edge of TX Disable to when the optical output falls below 10% of nominal
TX Disable Negate Time	t_on		1	ms	Time from falling edge of TX Disable to when the modulated optical output rises above 90% of nominal
Time to initialize, including reset of TX_Fault	t_init		300	ms	From power on or negation of TX Fault using TX Disable
TX Fault Assert Time	t_fault		100	µs	Time from fault to TX fault on.
TX Disable to reset	t_reset	10		µs	Time TX Disable must be held high to reset TX_fault
LOS Assert Time	t_loss_on		100	µs	Time from LOS state to RX LOS assert
LOS Deassert Time	t_loss_off		100	µs	Time from non-LOS state to RX LOS deassert
Rate-Select Change Time	t_ratesel		10	µs	Time from rising or falling edge of Rate Select input until receiver bandwidth is in conformance with appropriate specification.
Serial ID Clock Rate	f_serial_clock		100	kHz	

Table 7: Timing Characteristics

AIBAO reserves the right to make changes in the specification described hereinafter without prior notice.

AIBAO INTERNATIONAL LTD.
No.77, Shengli 6th St., Jhubei City,
Hsinchu County 302, Taiwan R.O.C.
Tel: +886-3-657-6363 Fax: +886-3-657-6963
http://www.aibaotech.com

11. MECHANICAL

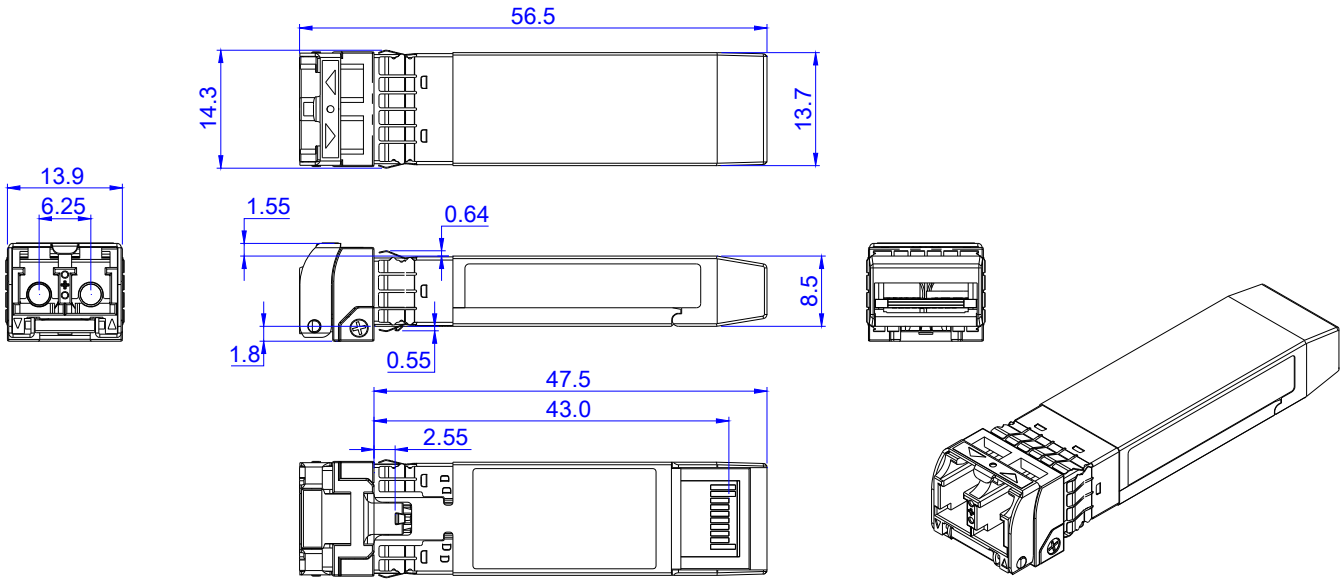

All dimensions are ±0.2mm unless otherwise specified

AIBAO

AIBAO reserves the right to make changes in the specification described hereinafter without prior notice.

Aibaotech

AIBAO INTERNATIONAL LTD.
No.77, Shengli 6th St., Jhubei City,
Hsinchu County 302, Taiwan R.O.C.
Tel: +886-3-657-6363 Fax: +886-3-657-6963
http://www.aibaotech.com

12. ESD

This transceiver is specified as ESD threshold 2kV for all electrical input pins, tested per MIL-STD-883, Method 3015.4 /JESD22-A114-A (HBM). However, normal ESD precautions are still required during the handling of this module. This transceiver is shipped in ESD protective packaging. It should be removed from the packaging and handled only in an ESD protected environment.

13. LASER SAFTY

This is a Class 1 Laser Product according to IEC 60825-1:1993:+A1:1997+A2:2001. This product complies with 21 CFR 1040.10 and 1040.11 except for deviations pursuant to Laser Notice No. 50, dated (July 26, 2001)

Caution: use of controls or adjustments or performance of procedures other than those specified herein may result in hazardous radiation exposure.

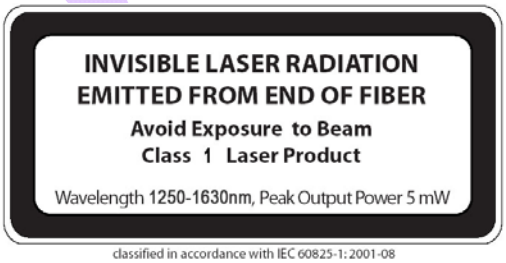

*IEC is a registered trademark of the International Electrotechnical Commission

**ANSI is a registered trademark of the American National Standards Institute

AIBAOTECH

Aibaotech

AIBAO INTERNATIONAL LTD.
No.77, Shengli 6th St., Jhubei City,
Hsinchu County 302, Taiwan R.O.C.
Tel: +886-3-657-6363 Fax: +886-3-657-6963
http://www.aibaotech.com