10Gb/s Multirate DDMI XFP (XFP DWDM EZR)
ITU Grid 100GHz C band wavelength
120km transmission distance

AB-XFP-DWDM-xxxx-120
Ver. A

Feature

- XFP MSA Rev 4.5 compliant
- ITU Grid 100GHz C-Band Wavelengths Compliant
- 120km Reach on SMF-28 fi ber utilizing Electronic Dispersion Compensation (EDC)
- Supports 9.95, 10.31, 10.52, 10.7 and 11.1Gb/s
- XFI High Speed Electrical Interface
- Digital Diagnostics Monitor
- Cooled EML with isolator
- APD Receiver
- 120km Reach
- RoHS Compliant
- Power dissipation <3.5W
- -5 to 70 C temperature range
- Cold Start Up Wavelength Compliance
- Class 1 Laser, 21CFR 1040.10/1040.11
- EN 60825-1/A1:2002 Compliant
- Bail Latch Color: WHITE

Absolute Maximum Rating

PARAMETER	SYMBOL	MIN	Typical	MAX	UNIT
Maximum Supply Voltage (3.3V)	Vcc3	–0.3		3.6	V
Maximum Supply Voltage (5.0V)	Vcc5	–0.3		5.5	V
Maximum Supply Voltage (1.8V)	Vcc2	–0.3		2	V
Storage Temperature	T_{st}	–40		85	°C

AIBAO reserves the right to make changes in the specification described hereinafter without prior notice.

Aibaotech
AIBAO INTERNATIONAL LTD.
No.77, Shengli 6th St., Jhubei City,
Hsinchu County 302, Taiwan R.O.C.
Tel: +886-3-657-6363 Fax: +886-3-657-6963
http://www.aibaotech.com

General Operations

PARAMETER	SYMBOL	MIN	Typical	MAX	UNIT
Supply Voltage (1.8V)	$V_{cc}2$	1.71	1.8	1.89	V
Supply Voltage (3.3V)	$V_{cc}3$	3.14	3.3	3.47	V
Supply Voltage (5V)	$V_{cc}5$	4.75	5	5.25	V
Total Current on any pin	I_{CC}	--	--	500	mA
Inrush Current (1.8V)	$I_{inrush}2$	--	--	1	A
Inrush Current (3.3V)	$I_{inrush}3$	--	--	0.75	A
Inrush Current (5V)	$I_{inrush}5$	--	--	0.5	A
Module current ramp rate	--	--	--	100	mA/µS
Power on 1.8V rail	P_{2rail}	--	--	1.8	W
Power on 3.3V rail	P_{3rail}	--	--	2.5	W
Power on 5V rail	P_{5rail}	--	--	2.5	W
Module Total Power consumption	P_t	--	--	3.5	W
Power Consumption-P_Down mode	P_{p_d}	--	--	1.5	W
Power Supply Noise Rejection	PSNR	Compliant to Section 2.7.2 of XFP MSA			
Bit Rate	BR	9.95	--	11.1	Gb/s
Operating Temperature (case)	T_{op}	-5	--	70	ºC
Storage Temperature	T_{st}	-40	--	85	ºC

Reference Clock

PARAMETER	SYMBOL	MIN	Typical	MAX	UNIT
Clock Differential Input Impedance	Zd	80	100	120	Ω
Differential Input Clock Amplitude (p-p)	--	640	--	1600	mV
Reference Clock Duty Cycle	--	40	--	60	%
Reference Clcok Rise/Fall Time (20%-80%)	Tr/Tf	200	--	1250	ps
Reference Clock Frequency	f_0	--	Baud/64	--	MHz

AIBAO reserves the right to make changes in the specification described hereinafter without prior notice.

AIBAO INTERNATIONAL LTD.
No.77, Shengli 6th St., Jhubei City,
Hsinchu County 302, Taiwan R.O.C.
Tel: +886-3-657-6363 Fax: +886-3-657-6963
http://www.aibaotech.com

Transmitter Specifications (Optical)

PARAMETER	SYMBOL	MIN	Typical	MAX	UNIT
Output Power	P_O	-2	0	2	dBm
Average Launch Power Tx_Off	Poff	--	--	-30	dBm
Extinction Ratio	ER	8.2	--	--	dB
Eye Mask	ITU-T G.691, Telcordia GR-253-CORE, IEEE802.3 10GBASE-ZR Compliant				
Side Mode Suppression Ratio	SMSR	30	--	--	dB
Center Wavelength	λ	ITU Grid			nm
Channel Spacing	Δf	--	100	--	GHz
Spectral Width	$\Delta\lambda$	--	--	1	nm
Jitter Generation (peak-to-peak)	Jgen(pk-pk)	--	--	0.1	UI
Jitter Generation (RMS)	Jgen(RMS)	--	--	0.01	UI
Dispersion Penalty at specified distance	DP	--	--	2	dB
Relative Intensity Noise	RIN	--	--	-130	dB/Hz
Reflectance Tolerance	ref_T	--	--	-27	dB

Transmitter Specifications (Electrical)

PARAMETER	SYMBOL	MIN	Typical	MAX	UNIT
Input Differential Impedence	Rin	--	100	--	Ω
Differential Data Input Swing	Vin,p-p	120	--	820	mV
TxDisable_Disable	Vd	2	--	Vcc3	V
TxDisable_Enable	Ven	GND	--	GND+0.8	V

AIBAO reserves the right to make changes in the specification described hereinafter without prior notice.

AIBAO INTERNATIONAL LTD.
No.77, Shengli 6th St., Jhubei City,
Hsinchu County 302, Taiwan R.O.C.
Tel: +886-3-657-6363 Fax: +886-3-657-6963
http://www.aibaotech.com

Receiver Specifications (Optical)

PARAMETER	SYMBOL	MIN	Typical	MAX	UNIT
Sensitivity (9.95Gb/s)[a]	$Rx_{sens995}$	--	--	-24	dBm
Sensitivity (10.7Gb/s)[a]	$Rx_{sens1070}$	--	--	-23	dBm
Overload[a]	Rx_{OL}	-7	--	--	dBm
Wavelength[b]	λ	1528	--	1561	nm
Optical Return Loss	ORL	--	--	-27	dB
LOS Assert	--	-34	--	--	dBm
LOS De-assert	--	--	--	-24	dBm
LOS Hysteresis	--	0.5	--	--	dB

a) At 9dB ER, 1E-12 BER, 2^{31}-1 PRBS, back to back

b) Operational over 1200 - 1625nm range

Receiver Specificatioins (Elelctrical)

PARAMETER	SYMBOL	MIN	Typical	MAX	UNIT
Reference Differential Output Impedence	Z_d	--	100	--	Ω
Differential Data Output Swing	Vout,p-p	340	--	850	mV
Output Rise Time, 20-120%	t_r	24	--	--	ps
Output Fall Time, 20-120%	t_f	24	--	--	ps
LOS Fault	V_{LOS_fault}	host_Vcc3 - 0.5	--	host_Vcc3	V
LOS Normal	V_{LOS_normal}	GND	--	GND + 0.4	V

AIBAO reserves the right to make changes in the specification described hereinafter without prior notice.

AIBAO INTERNATIONAL LTD.
No.77, Shengli 6th St., Jhubei City,
Hsinchu County 302, Taiwan R.O.C.
Tel: +886-3-657-6363 Fax: +886-3-657-6963
http://www.aibaotech.com

Pinout Diagram

Pin	*Logic*	*Symbol*	*Name/Description*	*Note*
1		GND	Module Ground	1
2		VEE5	Optional -5.2V Power Supply	
3	LVTTL-I	Mod_DeSel	Module De-select; When held low allows module to respond to 2-wire serial interface	
4	LVTTL-O	$\overline{\text{Interrupt}}$	$\overline{\text{Interrupt}}$; Indicates presence of an important condition which can be read over the 2-wire serial interface	2
5	LVTTL-I	TX_DIS	Transmitter Disable; Turns off transmitter laser output	
6		VCC5	+5V Power Supply	
7		GND	Module Ground	1
8		VCC3	+3.3V Power Supply	
9		VCC3	+3.3V Power Supply	
10	LVTTL-I/O	SCL	2-Wire Serial Interface Clock	2
11	LVTTL-I/O	SDA	2-Wire Serial Interface Data Line	2
12	LVTTL-O	Mod_Abs	Indicates Module is not present. Grounded in the Module	2
13	LVTTL-O	Mod_NR	Module Not Ready; Indicating Module Operational Fault	2
14	LVTTL-O	RX_LOS	Receiver Loss Of Signal Indicator	2
15		GND	Module Ground	1
16		GND	Module Ground	1
17	CML-O	RD-	Receiver Inverted Data Output	
18	CML-O	RD+	Receiver Non-Inverted Data Output	
19		GND	Module Ground	1
20		VCC2	+1.8V Power Supply	3
21	LVTTL-I	P_Down/RST	Power down; When high, requires the module to limit power consumption to 1.5W or below. 2-Wire serial interface must be functional in the low power mode.	
			Reset; The falling edge initiates a complete reset of the module including the 2-wire serial interface, equivalent to a power cycle.	
22		VCC2	+1.8V Power Supply	3
23		GND	Module Ground	1
24	PECL-I	RefCLK+	Reference Clock Non-Inverted Input, AC coupled on the host board	
25	PECL-I	RefCLK-	Reference Clock Inverted Input, AC coupled on the host board	
26		GND	Module Ground	1
27		GND	Module Ground	1
28	CML-I	TD-	Transmitter Inverted Data Input	
29	CML-I	TD+	Transmitter Non-Inverted Data Input	
30		GND	Module Ground	1

1. Module ground pins Gnd are isolated from the module case and chassis ground within the module.
2. Shall be pulled up with 4.7K-10Kohms to a voltage between 3.15V and 3.45V on the host board.
3. The 1.8 V power supply can be optionally programmed to voltages lower than 1.8 V in modules supporting the variable power supply.

AIBAO reserves the right to make changes in the specification described hereinafter without prior notice.

AIBAO INTERNATIONAL LTD.
No.77, Shengli 6th St., Jhubei City,
Hsinchu County 302, Taiwan R.O.C.
Tel: +886-3-657-6363 Fax: +886-3-657-6963
http://www.aibaotech.com

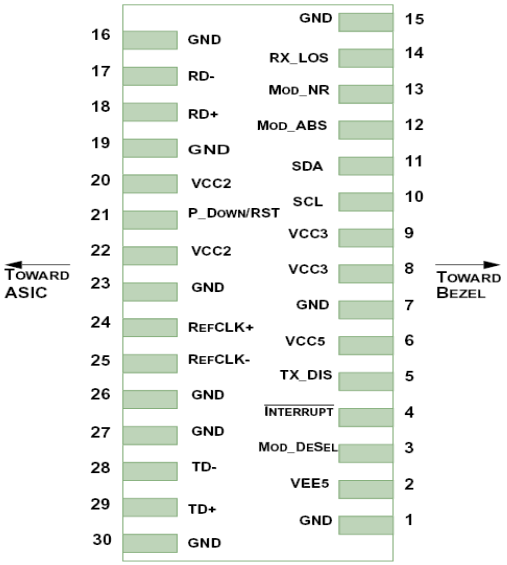

Suggest Transceiver / Host Interface

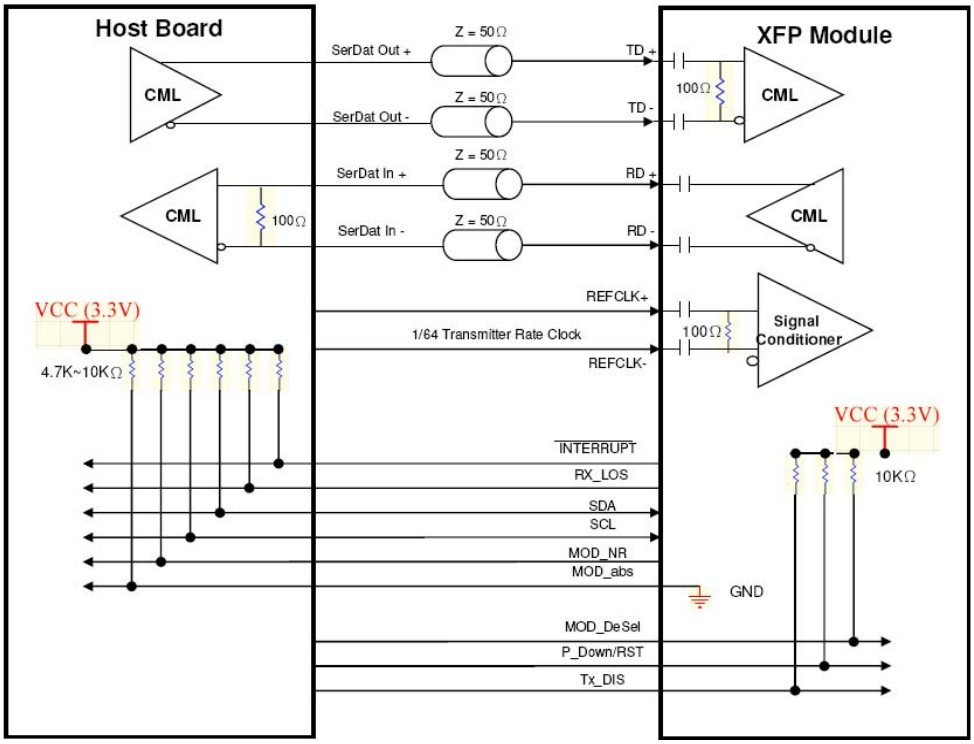

AIBAO reserves the right to make changes in the specification described hereinafter without prior notice.

Aibaotech

AIBAO INTERNATIONAL LTD.
No.77, Shengli 6th St., Jhubei City,
Hsinchu County 302, Taiwan R.O.C.
Tel: +886-3-657-6363 Fax: +886-3-657-6963
http://www.aibaotech.com

- **MOD_NR**

The Mod_NR is an output pin that when High, indicates that the module has detected a condition that renders transmitter and or receiver data invalid, shall consist of logical OR of the following signals:

• Transmit Signal Conditioner Loss of Lock

• Transmitter Laser Fault

• Receiver Signal Conditioner Loss of Lock

- **MOD_DESEL**

The Mod_DeSel is an input pin. When held Low by the host, the module responds to 2-wire serial communication commands. The Mod_DeSel allows the use of multiple XFP modules on a single 2-wire interface bus.
When the Mod_DeSel pin is “High”, the module shall not respond to or acknowledge any 2-wire interface communication from the host.

- **$\overline{\text{INTERRUPT}}$**

Interrupt is an output pin. When “Low”, indicates possible module operational fault or a status critical to the host system.

- **TX_DIS**

TX_DIS is an input pin. When TX_DIS is asserted High, the XFP module transmitter output must be turned off.

- **MOD_ABS**

Mod_ABS is pulled up to Host_Vcc on the host board and grounded in the XFP module. Mod_ABS is then asserted “High” when the XFP module is physically absent from a host slot.

- **RX_LOS**

The RX_LOS when High indicates insufficient optical power for reliable signal reception.

- **P_DOWN/RST**

This is a multifunction pin for module Power Down and Reset. The P_Down/RST pin must be pulled up to VCC3 in the XFP module.

- **POWER DOWN FUNCTION**

The P_Down pin, when held High by the host, places the module in the standby (Low Power) mode with a maximum power dissipation of 1.5W. This protects hosts which are not capable of cooling higher power modules which may be accidentally inserted.

AIBAO reserves the right to make changes in the specification described hereinafter without prior notice.

Aibaotech

AIBAO INTERNATIONAL LTD.
No.77, Shengli 6th St., Jhubei City,
Hsinchu County 302, Taiwan R.O.C.
Tel: +886-3-657-6363 Fax: +886-3-657-6963
http://www.aibaotech.com

Dimensions (mm)

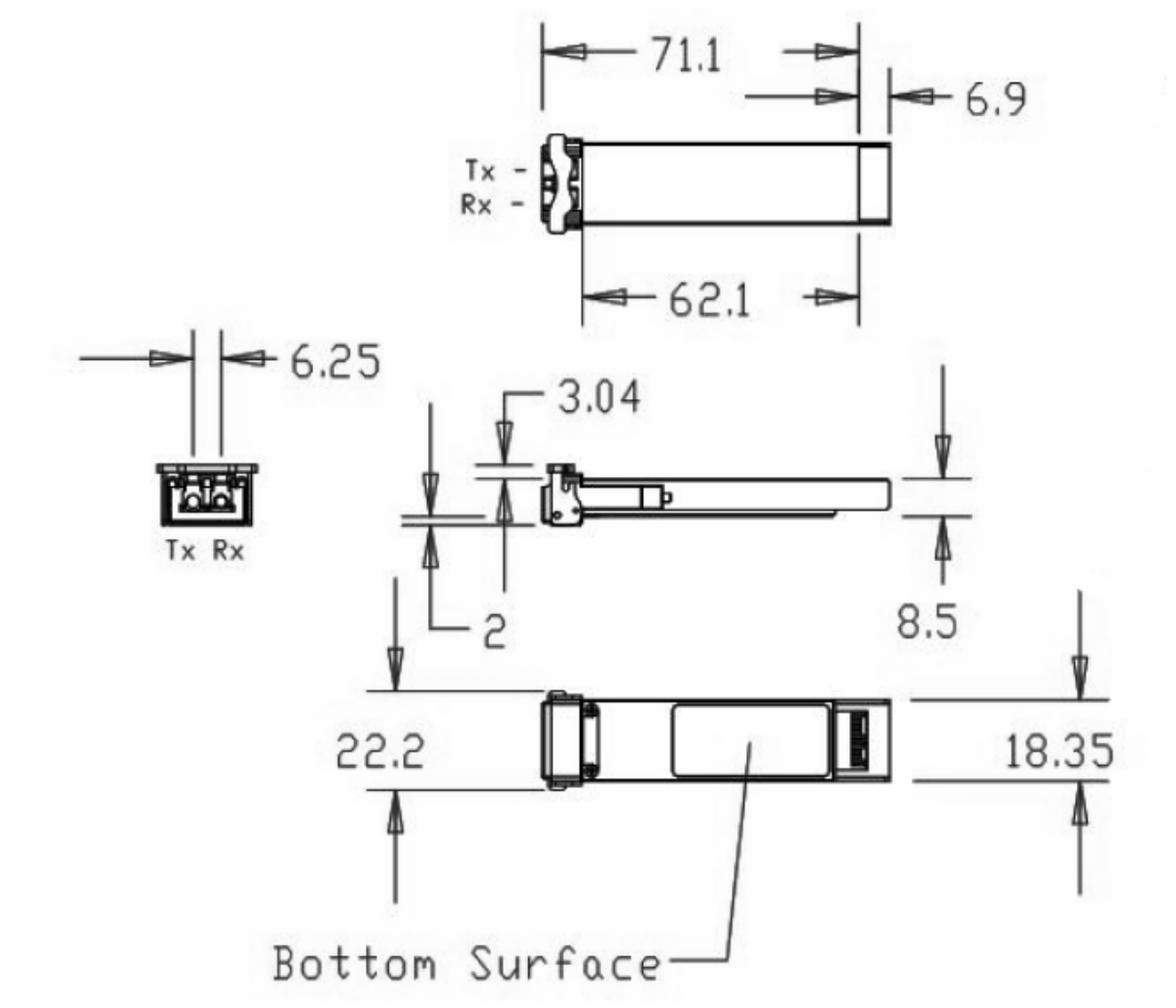

AIBAO reserves the right to make changes in the specification described hereinafter without prior notice.

AIBAO INTERNATIONAL LTD.
No.77, Shengli 6th St., Jhubei City,
Hsinchu County 302, Taiwan R.O.C.
Tel: +886-3-657-6363 Fax: +886-3-657-6963
http://www.aibaotech.com

10Gb/s Multirate DDMI XFP (XFP DWDM EZR)
ITU Grid 100GHz C band wavelength
120km transmission distance

AB-XFP-DWDM-xxxx-120
Ver. A

Order Information

Aibaotech Order No.	Bit Rate (Gb/s)	ITU Grid Ch. No.	Distance (Km)	Wavelength (nm)	Package & Function
AB-XFP-DWDM-2877-120	9.95 ~ 11.1	CH61	SM - 120	1528.77	2 core LC XFP w/i DDMI
AB-XFP-DWDM-2955-120	9.95 ~ 11.1	CH60	SM - 120	1529.55	2 core LC XFP w/i DDMI
AB-XFP-DWDM-3033-120	9.95 ~ 11.1	CH59	SM - 120	1530.33	2 core LC XFP w/i DDMI
AB-XFP-DWDM-3112-120	9.95 ~ 11.1	CH58	SM - 120	1531.12	2 core LC XFP w/i DDMI
AB-XFP-DWDM-3190-120	9.95 ~ 11.1	CH57	SM - 120	1531.9	2 core LC XFP w/i DDMI
AB-XFP-DWDM-3268-120	9.95 ~ 11.1	CH56	SM - 120	1532.68	2 core LC XFP w/i DDMI
AB-XFP-DWDM-3347-120	9.95 ~ 11.1	CH55	SM - 120	1533.47	2 core LC XFP w/i DDMI
AB-XFP-DWDM-3425-120	9.95 ~ 11.1	CH54	SM - 120	1534.25	2 core LC XFP w/i DDMI
AB-XFP-DWDM-3504-120	9.95 ~ 11.1	CH53	SM - 120	1535.04	2 core LC XFP w/i DDMI
AB-XFP-DWDM-3582-120	9.95 ~ 11.1	CH52	SM - 120	1535.82	2 core LC XFP w/i DDMI
AB-XFP-DWDM-3661-120	9.95 ~ 11.1	CH51	SM - 120	1536.61	2 core LC XFP w/i DDMI
AB-XFP-DWDM-3740-120	9.95 ~ 11.1	CH50	SM - 120	1537.40	2 core LC XFP w/i DDMI
AB-XFP-DWDM-3819-120	9.95 ~ 11.1	CH49	SM - 120	1538.19	2 core LC XFP w/i DDMI
AB-XFP-DWDM-3898-120	9.95 ~ 11.1	CH48	SM - 120	1538.98	2 core LC XFP w/i DDMI
AB-XFP-DWDM-3977-120	9.95 ~ 11.1	CH47	SM - 120	1539.77	2 core LC XFP w/i DDMI
AB-XFP-DWDM-4056-120	9.95 ~ 11.1	CH46	SM - 120	1540.56	2 core LC XFP w/i DDMI
AB-XFP-DWDM-4135-120	9.95 ~ 11.1	CH45	SM - 120	1541.35	2 core LC XFP w/i DDMI
AB-XFP-DWDM-4214-120	9.95 ~ 11.1	CH44	SM - 120	1542.14	2 core LC XFP w/i DDMI
AB-XFP-DWDM-4294-120	9.95 ~ 11.1	CH43	SM - 120	1542.94	2 core LC XFP w/i DDMI
AB-XFP-DWDM-4373-120	9.95 ~ 11.1	CH42	SM - 120	1543.73	2 core LC XFP w/i DDMI
AB-XFP-DWDM-4453-120	9.95 ~ 11.1	CH41	SM - 120	1544.53	2 core LC XFP w/i DDMI
AB-XFP-DWDM-4532-120	9.95 ~ 11.1	CH40	SM - 120	1545.32	2 core LC XFP w/i DDMI
AB-XFP-DWDM-4612-120	9.95 ~ 11.1	CH39	SM - 120	1546.12	2 core LC XFP w/i DDMI
AB-XFP-DWDM-4692-120	9.95 ~ 11.1	CH38	SM - 120	1546.92	2 core LC XFP w/i DDMI
AB-XFP-DWDM-4772-120	9.95 ~ 11.1	CH37	SM - 120	1547.72	2 core LC XFP w/i DDMI
AB-XFP-DWDM-4851-120	9.95 ~ 11.1	CH36	SM - 120	1548.51	2 core LC XFP w/i DDMI
AB-XFP-DWDM-4932-120	9.95 ~ 11.1	CH35	SM - 120	1549.32	2 core LC XFP w/i DDMI
AB-XFP-DWDM-5012-120	9.95 ~ 11.1	CH34	SM - 120	1550.12	2 core LC XFP w/i DDMI

AIBAO reserves the right to make changes in the specification described hereinafter without prior notice.

Aibaotech
AIBAO INTERNATIONAL LTD.
No.77, Shengli 6th St., Jhubei City,
Hsinchu County 302, Taiwan R.O.C.
Tel: +886-3-657-6363 Fax: +886-3-657-6963
http://www.aibaotech.com

AB-XFP-DWDM-5092-120	9.95 ~ 11.1	CH33	SM - 120	1550.92	2 core LC XFP w/i DDMI
AB-XFP-DWDM-5172-120	9.95 ~ 11.1	CH32	SM - 120	1551.72	2 core LC XFP w/i DDMI
AB-XFP-DWDM-5252-120	9.95 ~ 11.1	CH31	SM - 120	1552.52	2 core LC XFP w/i DDMI
AB-XFP-DWDM-5333-120	9.95 ~ 11.1	CH30	SM - 120	1553.33	2 core LC XFP w/i DDMI
AB-XFP-DWDM-5413-120	9.95 ~ 11.1	CH29	SM - 120	1554.13	2 core LC XFP w/i DDMI
AB-XFP-DWDM-5494-120	9.95 ~ 11.1	CH28	SM - 120	1554.94	2 core LC XFP w/i DDMI
AB-XFP-DWDM-5575-120	9.95 ~ 11.1	CH27	SM - 120	1555.75	2 core LC XFP w/i DDMI
AB-XFP-DWDM-5655-120	9.95 ~ 11.1	CH26	SM - 120	1556.55	2 core LC XFP w/i DDMI
AB-XFP-DWDM-5736-120	9.95 ~ 11.1	CH25	SM - 120	1557.36	2 core LC XFP w/i DDMI
AB-XFP-DWDM-5817-120	9.95 ~ 11.1	CH24	SM - 120	1558.17	2 core LC XFP w/i DDMI
AB-XFP-DWDM-5898-120	9.95 ~ 11.1	CH23	SM - 120	1558.98	2 core LC XFP w/i DDMI
AB-XFP-DWDM-5979-120	9.95 ~ 11.1	CH22	SM - 120	1559.79	2 core LC XFP w/i DDMI
AB-XFP-DWDM-6061-120	9.95 ~ 11.1	CH21	SM - 120	1560.61	2 core LC XFP w/i DDMI
AB-XFP-DWDM-6142-120	9.95 ~ 11.1	CH20	SM - 120	1561.42	2 core LC XFP w/i DDMI
AB-XFP-DWDM-6223-120	9.95 ~ 11.1	CH19	SM - 120	1562.23	2 core LC XFP w/i DDMI
AB-XFP-DWDM-6305-120	9.95 ~ 11.1	CH18	SM - 120	1563.05	2 core LC XFP w/i DDMI
AB-XFP-DWDM-6386-120	9.95 ~ 11.1	CH17	SM - 120	1563.86	2 core LC XFP w/i DDMI

Safety Information

- All versions of this laser are Class 1 laser products per IEC* 60825-1:2001. Users should observe safety precautions such as those recommended by ANSI** Z136.1-2000, ANSI Z36.2-1997 and IEC 60825-1:2001.
- Caution: use of controls or adjustments or performance of procedures other than those specified herein may result in hazardous radiation exposure.

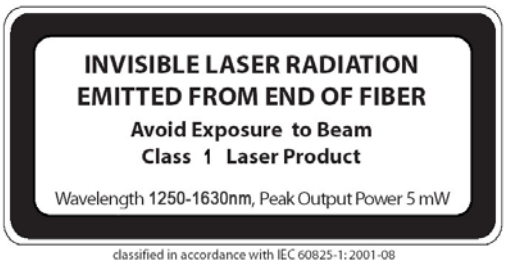

classified in accordance with IEC 60825-1: 2001-08

*IEC is a registered trademark of the International Electrotechnical Commission

**ANSI is a registered trademark of the American National Standards Institute

AIBAO reserves the right to make changes in the specification described hereinafter without prior notice.

Aibaotech

AIBAO INTERNATIONAL LTD.
No.77, Shengli 6th St., Jhubei City,
Hsinchu County 302, Taiwan R.O.C.
Tel: +886-3-657-6363 Fax: +886-3-657-6963
http://www.aibaotech.com