# GigaBit Interface Converter ( GBE GBIC ZX )
# 1.25Gbps 1550nm DFB Single Mode Transceiver

**AB-GSC-ZX-SM**
**Ver. A**

## Feature

- Compliant with Gigabit Interface Converter (GBIC)
- 1.0625Gbps Fiber Channel Compliant
- 1.25Gbps Gigabit Ethernet Compliant
- Single 3.3/5.0V Power Supply Voltage
- AC/AC Differential Electrical Interface
- For SMF 80km transmission
- Duplex SC Connector
- Class 1 laser product
- RoHS Compliance

## Application

- Router / Server interface
- Distributed multi-processing
- Switch to switch interface
- High speed I/O for file server

## Absolute Maximum Rating

| PARAMETER | SYMBOL | MIN | MAX | UNIT |
|---|---|---|---|---|
| Storage Temperature | $T_S$ | –40 | 85 | °C |
| Supply Voltage | Vcc | 0 | 6 | V |
| Input Voltage | $V_{IN}$ | 0 | *Vcc* | V |
| Operating Humidity | | 5 | 95 | % |

## Recommended Operating Condition

| PARAMETER | SYMBOL | MIN | MAX | UNIT | NOTE |
|---|---|---|---|---|---|
| Ambient Operating Temperature | $T_A$ | 0 | 70 | °C | |
| Supply Voltage | *Vcc* | 3.1 | 5.25 | V | |
| Supply Current | $I_{TX} + I_{RX}$ | | 300 | mA | |

AIBAO reserves the right to make changes in the specification described hereinafter without prior notice.

AIBAO INTERNATIONAL LTD.
No.77, Shengli 6th St., Jhubei City,
Hsinchu County 302, Taiwan R.O.C.
Tel: +886-3-657-6363 Fax: +886-3-657-6963
http://www.aibaotech.com

## Transmitter Electro-optical Characteristic

***Vcc* = 3.1 V to 5.25 V, $T_A$ = 0 °C to 70 °C**

| PARAMETER | SYMBOL | MIN | TYP. | MAX | UNIT | NOTE |
|---|---|---|---|---|---|---|
| Output Optical Power 9/125 μm fiber | $P_{out}$ | 0 | | 5 | dBm | |
| Extinction Ratio | ER | 9 | | | dB | |
| Center Wavelength | $\lambda_C$ | 1530 | 1550 | 1570 | nm | |
| Spectral Width (-20dB) | $\Delta\lambda$ | | | 1 | nm | |
| Side Mode Suppression Ratio | SMSR | 30 | | | dB | |
| Rise/Fall Time, (20–80%) | $T_{r,f}$ | | | 260 | ps | |
| Relative Intensity Noise | RIN | | | –120 | dB/Hz | |
| Total Jitter | TJ | | | 227 | ps | |
| Output Eye | Compliant with IEEE802.3z/D5.0 | | | | | |
| Tx_ Fault Output Voltage - Low | $V_{OL}$ | 0.0 | | 0.8 | V | |
| Tx_ Fault Output Voltage - High | $V_{OH}$ | 2.0 | | $V_{CC}$ | V | |
| Tx_ Disable Input Voltage - Low | $V_{IL}$ | 0.0 | | 0.8 | V | |
| Tx_ Disable Input Voltage - High | $V_{IH}$ | 2.0 | | $V_{CC}$ | V | |

## Receiver Electro-optical Characteristic

***Vcc* = 3.1 V to 5.25 V, $T_A$ = 0 °C to 70 °C**

| PARAMETER | SYMBOL | MIN | TYP. | MAX | UNIT | NOTE |
|---|---|---|---|---|---|---|
| Optical Input Power-maximum | $P_{IN}$ | -3 | | | dBm | BER < $10^{-12}$ |
| Optical Input Power-minimum (Sensitivity) | $P_{IN}$ | | | -23 | dBm | BER < $10^{-12}$ |
| Operating Center Wavelength | $\lambda_C$ | 1100 | | 1600 | nm | |
| Loss of signal -Asserted | $P_A$ | –35 | | | dBm | |
| Loss of signal -Deasserted | $P_D$ | | | -23 | dBm | |
| Signal Detect Hysteresis | $P_{HYS}$ | 0.5 | | | dB | |
| Return Loss | ORL | 12 | | | dB | |
| Receiver Loss of Signal Output Voltage-Low | $RX_LOS_L$ | 0 | | 0.8 | V | |
| Receiver Loss of Signal Output Voltage-High | $RX_LOS_H$ | 2.0 | | $V_{CC}$ | V | |

AIBAO reserves the right to make changes in the specification described hereinafter without prior notice.

AIBAO INTERNATIONAL LTD.
No.77, Shengli 6th St., Jhubei City,
Hsinchu County 302, Taiwan R.O.C.
Tel: +886-3-657-6363 Fax: +886-3-657-6963
http://www.aibaotech.com

## Timing Requirement

***Vcc* = 3.1 V to 5.25 V, $T_A$ = 0 °C to 70 °C**

| PARAMETER | SYMBOL | MIN | TYP. | MAX | UNITS | NOTE |
|---|---|---|---|---|---|---|
| TX_DISABLE Assert Time | t_off | | | 10 | μs | |
| TX_DISABLE Negate Time | t_on | | | 1 | ms | |
| Time to initialize, include reset of TX_FAULT | t_init | | | 300 | ms | |
| TX_FAULT from fault to assertion | t_fault | | | 100 | μs | |
| TX_DISABLE time to start reset | t_reset | 10 | | | μs | |
| Receiver Loss of Signal Assert Time (off to on) | $t_{A,RX_LOS}$ | | | 100 | μs | |
| Receiver Loss of Signal Assert Time (on to off) | $t_{D,RX_LOS}$ | | | 100 | μs | |

## Block Lock Diagram Of Transceiver

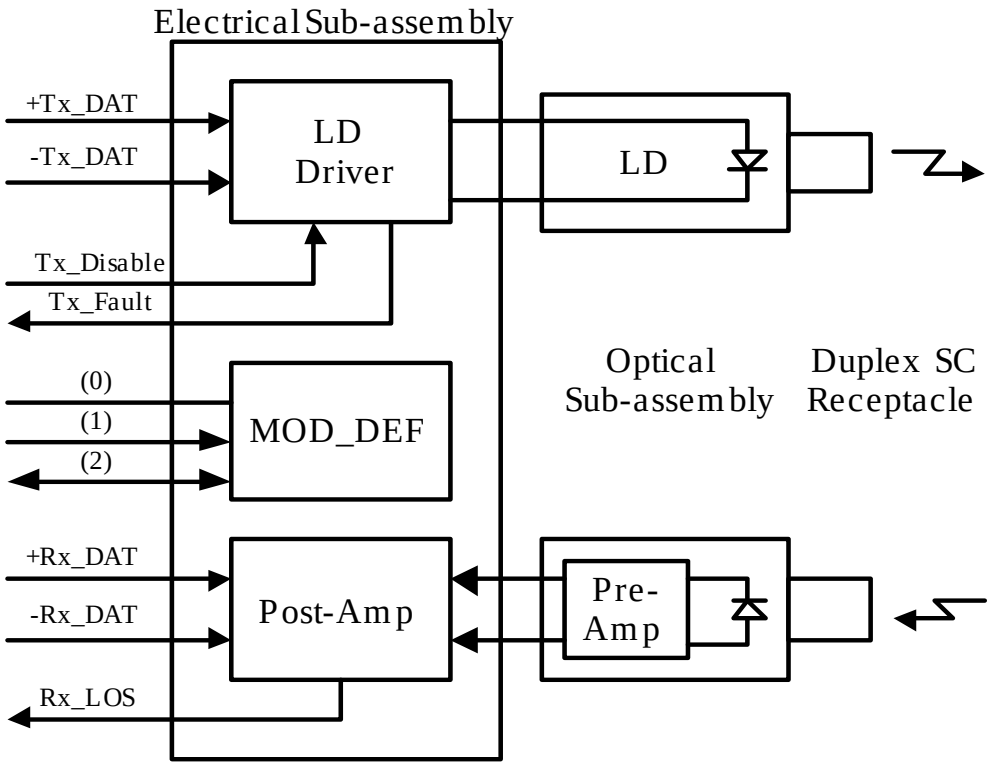


AIBAO reserves the right to make changes in the specification described hereinafter without prior notice.

AIBAO INTERNATIONAL LTD.
No.77, Shengli 6th St., Jhubei City,
Hsinchu County 302, Taiwan R.O.C.
Tel: +886-3-657-6363 Fax: +886-3-657-6963
http://www.aibaotech.com

## Pin Assignment

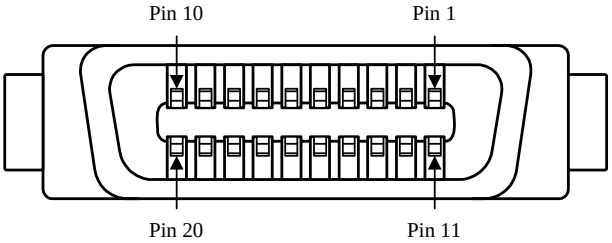


**GBIC Transceiver Electric Pad Layout**

## Pin Function Definition

| Pin No. | Symbol | Functional Description |
|---|---|---|
| 1 | Rx_LOS | Loss of Signal |
| 2 | RGND | Receiver Ground |
| 3 | RGND | Receiver Ground |
| 4 | MOD-DEF(0) | Module Definition 0 – Grounded in module |
| 5 | MOD-DEF(1) | Module Definition 1 – Two wire serial ID interface |
| 6 | MOD-DEF(2) | Module Definition 2 – Two wire serial ID interface |
| 7 | Tx_Disable | Transmitter Disable – Module disables on high or open |
| 8 | TGND | Transmitter Ground |
| 9 | TGND | Transmitter Ground |
| 10 | Tx_Fault | Transmitter Fault Indication |
| 11 | RGND | Receiver Ground |
| 12 | -Rx_DAT | Inverse Received Data Out |
| 13 | +Rx_DAT | Received Data Out |
| 14 | RGND | Receiver Ground |
| 15 | $V_{DD}R$ | Receiver Power |
| 16 | $V_{DD}T$ | Transmitter Power |
| 17 | TGND | Transmitter Ground |
| 18 | +Tx_DAT | Transmitter Data In |
| 19 | -Tx_DAT | Inverse Transmitter Data In |
| 20 | TGND | Transmitter Ground |

AIBAO reserves the right to make changes in the specification described hereinafter without prior notice.

AIBAO INTERNATIONAL LTD.
No.77, Shengli 6th St., Jhubei City,
Hsinchu County 302, Taiwan R.O.C.
Tel: +886-3-657-6363 Fax: +886-3-657-6963
http://www.aibaotech.com

## Suggest Transceiver / Host Interface

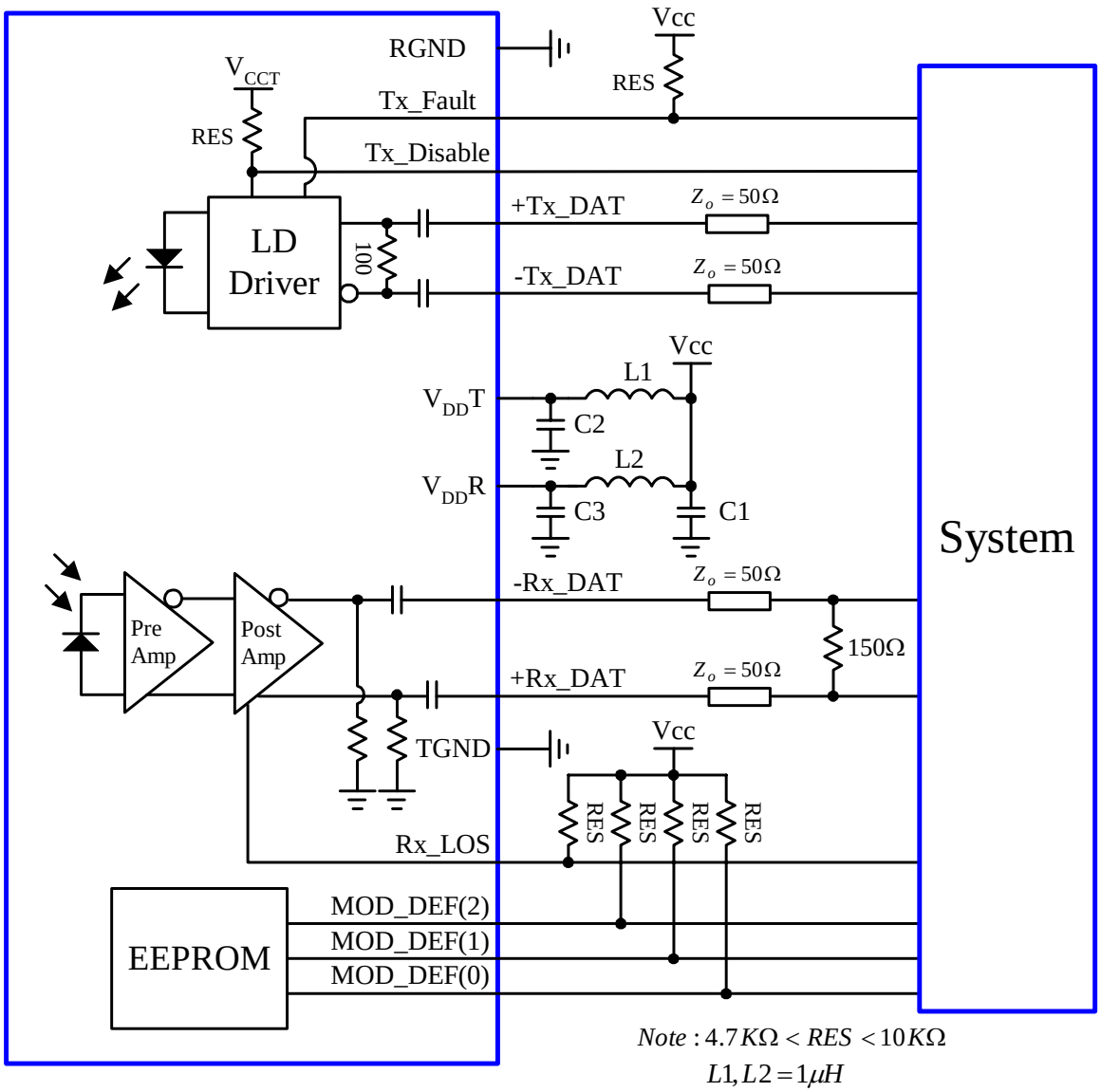


$Note: 4.7K\Omega < RES < 10K\Omega$

$L1, L2 = 1\mu H$

$C1 = 10\mu F$

$C2, C3 = 0.1\mu F$

AIBAO reserves the right to make changes in the specification described hereinafter without prior notice.

AIBAO INTERNATIONAL LTD.
No.77, Shengli 6th St., Jhubei City,
Hsinchu County 302, Taiwan R.O.C.
Tel: +886-3-657-6363 Fax: +886-3-657-6963
http://www.aibaotech.com

## Dimensions (mm):

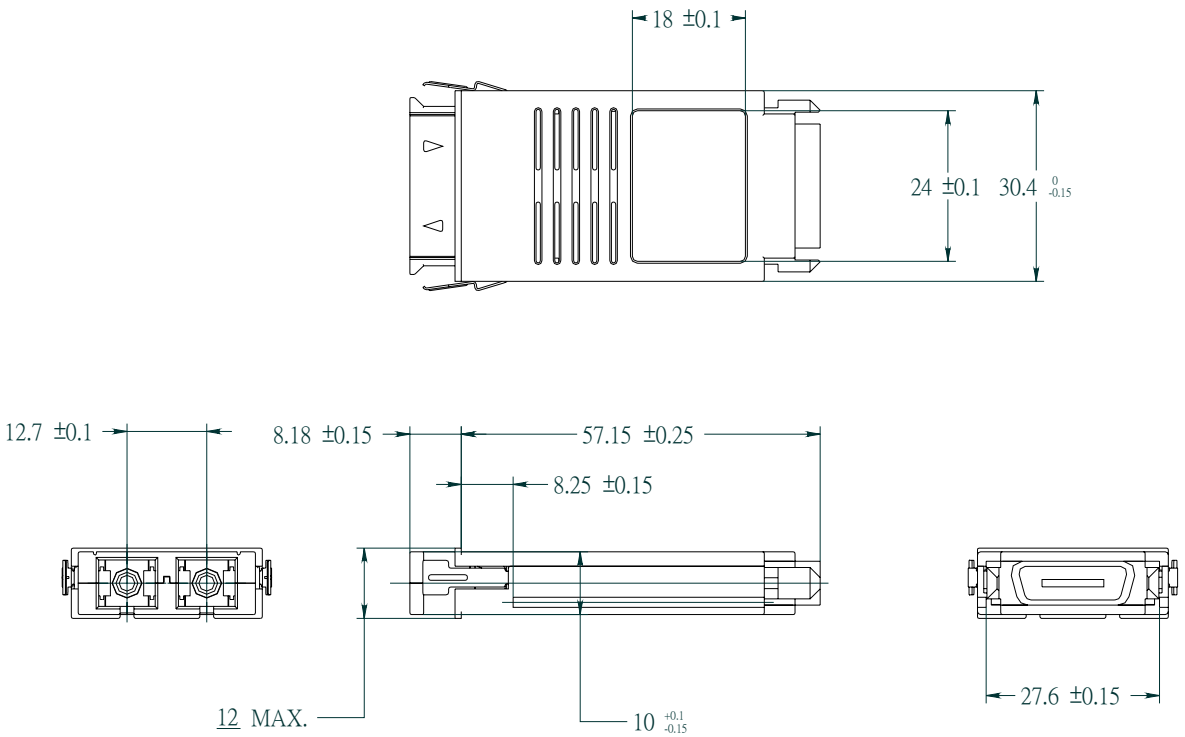


## Safety Information

- All versions of this laser are Class 1 laser products per IEC* 60825-1:2001. Users should observe safety precautions such as those recommended by ANSI** Z136.1-2000, ANSI Z36.2-1997 and IEC 60825-1:2001.
- Caution: use of controls or adjustments or performance of procedures other than those specified herein may result in hazardous radiation exposure.

*IEC is a registered trademark of the International Electrotechnical Commission

**ANSI is a registered trademark of the American National Standards Institute

AIBAO reserves the right to make changes in the specification described hereinafter without prior notice.

AIBAO INTERNATIONAL LTD.
No.77, Shengli 6th St., Jhubei City,
Hsinchu County 302, Taiwan R.O.C.
Tel: +886-3-657-6363 Fax: +886-3-657-6963
http://www.aibaotech.com