GigaBit Interface Converter (GBE GBIC LX)
1.25Gbps 1310nm FP Single Mode Transceiver

AB-GSC-LX-SM
Ver. A

Feature

- Compliant with Gigabit Interface Converter (GBIC)
- 1.0625Gbps Fiber Channel Compliant
- 1.25Gbps Gigabit Ethernet Compliant
- Single 3.3/5.0V Power Supply Voltage
- AC/AC Differential Electrical Interface
- For SMF 10km transmission
- Duplex SC Connector
- Class 1 laser product
- RoHS Compliance

Application

- Router / Server interface
- Distributed multi-processing
- Switch to switch interface
- High speed I/O for file server

Absolute Maximum Rating

PARAMETER	SYMBOL	MIN	MAX	UNIT
Storage Temperature	T_S	–40	85	°C
Supply Voltage	Vcc	0	6	V
Input Voltage	V_{IN}	0	*Vcc*	V
Operating Humidity		5	95	%

Recommended Operating Condition

PARAMETER	SYMBOL	MIN	MAX	UNIT	NOTE
Ambient Operating Temperature	T_A	0	70	°C	
Supply Voltage	*Vcc*	3.1	5.25	V	
Supply Current	$I_{TX} + I_{RX}$		300	mA	

AIBAO reserves the right to make changes in the specification described hereinafter without prior notice.

Aibaotech

AIBAO INTERNATIONAL LTD.
No.77, Shengli 6th St., Jhubei City,
Hsinchu County 302, Taiwan R.O.C.
Tel: +886-3-657-6363 Fax: +886-3-657-6963
http://www.aibaotech.com

Transmitter Electro-optical Characteristic

***Vcc* = 3.1 V to 5.25 V, T_A = 0 °C to 70 °C**

PARAMETER	SYMBOL	MIN	TYP.	MAX	UNIT	NOTE
Output Optical Power 9/125 μm fiber	P_{out}	-9.5		-3	dBm	
Extinction Ratio	ER	9			dB	
Center Wavelength	λ_C	1270	1310	1355	nm	
Spectral Width - rms	$\Delta\lambda$			4	nm	
Rise/Fall Time, (20–80%)	$T_{r,f}$			260	ps	
Relative Intensity Noise	RIN			–120	dB/Hz	
Total Jitter	TJ			227	ps	
Output Eye	Compliant with IEEE802.3z/D5.0					
Tx_ Fault Output Voltage - Low	V_{OL}	0.0		0.8	V	
Tx_ Fault Output Voltage - High	V_{OH}	2.0		V_{CC}	V	
Tx_ Disable Input Voltage - Low	V_{IL}	0.0		0.8	V	
Tx_ Disable Input Voltage - High	V_{IH}	2.0		V_{CC}	V	

Receiver Electro-optical Characteristic

***Vcc* = 3.1 V to 5.25 V, T_A = 0 °C to 70 °C**

PARAMETER	SYMBOL	MIN	TYP.	MAX	UNIT	NOTE
Optical Input Power-maximum	P_{IN}	-3			dBm	BER < 10^{-12}
Optical Input Power-minimum (Sensitivity)	P_{IN}			-21	dBm	BER < 10^{-12}
Operating Center Wavelength	λ_C	1100		1600	nm	
Loss of signal -Asserted	P_A	–35			dBm	
Loss of signal -Deasserted	P_D			-21	dBm	
Signal Detect Hysteresis	P_{HYS}	0.5			dB	
Return Loss	ORL	12			dB	
Receiver Loss of Signal Output Voltage-Low	RX_LOS_L	0		0.8	V	
Receiver Loss of Signal Output Voltage-High	RX_LOS_H	2.0		V_{CC}	V	

AIBAO reserves the right to make changes in the specification described hereinafter without prior notice.

AIBAO INTERNATIONAL LTD.
No.77, Shengli 6th St., Jhubei City,
Hsinchu County 302, Taiwan R.O.C.
Tel: +886-3-657-6363 Fax: +886-3-657-6963
http://www.aibaotech.com

Timing Requirement

***Vcc* = 3.1 V to 5.25 V, T_A = 0 °C to 70 °C**

PARAMETER	SYMBOL	MIN	TYP.	MAX	UNITS	NOTE
TX_DISABLE Assert Time	t_off			10	μs	
TX_DISABLE Negate Time	t_on			1	ms	
Time to initialize, include reset of TX_FAULT	t_init			300	ms	
TX_FAULT from fault to assertion	t_fault			100	μs	
TX_DISABLE time to start reset	t_reset	10			μs	
Receiver Loss of Signal Assert Time (off to on)	t_{A,RX_LOS}			100	μs	
Receiver Loss of Signal Assert Time (on to off)	t_{D,RX_LOS}			100	μs	

Block Lock Diagram Of Transceiver

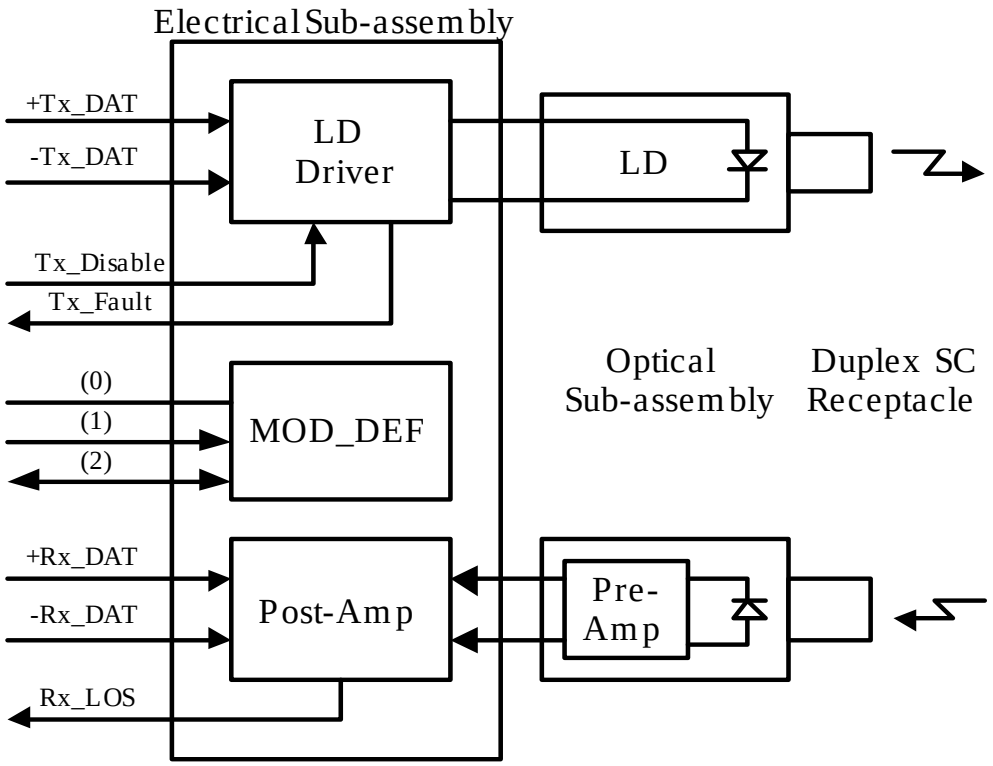

AIBAO reserves the right to make changes in the specification described hereinafter without prior notice.

AIBAO INTERNATIONAL LTD.
No.77, Shengli 6th St., Jhubei City,
Hsinchu County 302, Taiwan R.O.C.
Tel: +886-3-657-6363 Fax: +886-3-657-6963
http://www.aibaotech.com

Pin Assignment

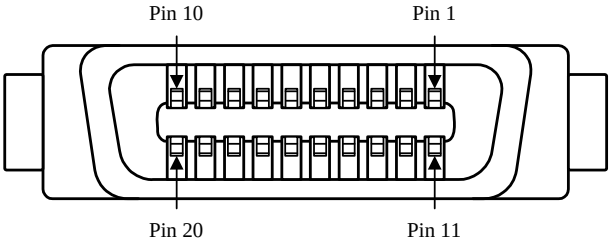

GBIC Transceiver Electric Pad Layout

Pin Function Definition

Pin No.	Symbol	Functional Description
1	Rx_LOS	Loss of Signal
2	RGND	Receiver Ground
3	RGND	Receiver Ground
4	MOD-DEF(0)	Module Definition 0 – Grounded in module
5	MOD-DEF(1)	Module Definition 1 – Two wire serial ID interface
6	MOD-DEF(2)	Module Definition 2 – Two wire serial ID interface
7	Tx_Disable	Transmitter Disable – Module disables on high or open
8	TGND	Transmitter Ground
9	TGND	Transmitter Ground
10	Tx_Fault	Transmitter Fault Indication
11	RGND	Receiver Ground
12	-Rx_DAT	Inverse Received Data Out
13	+Rx_DAT	Received Data Out
14	RGND	Receiver Ground
15	$V_{DD}R$	Receiver Power
16	$V_{DD}T$	Transmitter Power
17	TGND	Transmitter Ground
18	+Tx_DAT	Transmitter Data In
19	-Tx_DAT	Inverse Transmitter Data In
20	TGND	Transmitter Ground

AIBAO reserves the right to make changes in the specification described hereinafter without prior notice.

AIBAO INTERNATIONAL LTD.
No.77, Shengli 6th St., Jhubei City,
Hsinchu County 302, Taiwan R.O.C.
Tel: +886-3-657-6363 Fax: +886-3-657-6963
http://www.aibaotech.com

Suggest Transceiver / Host Interface

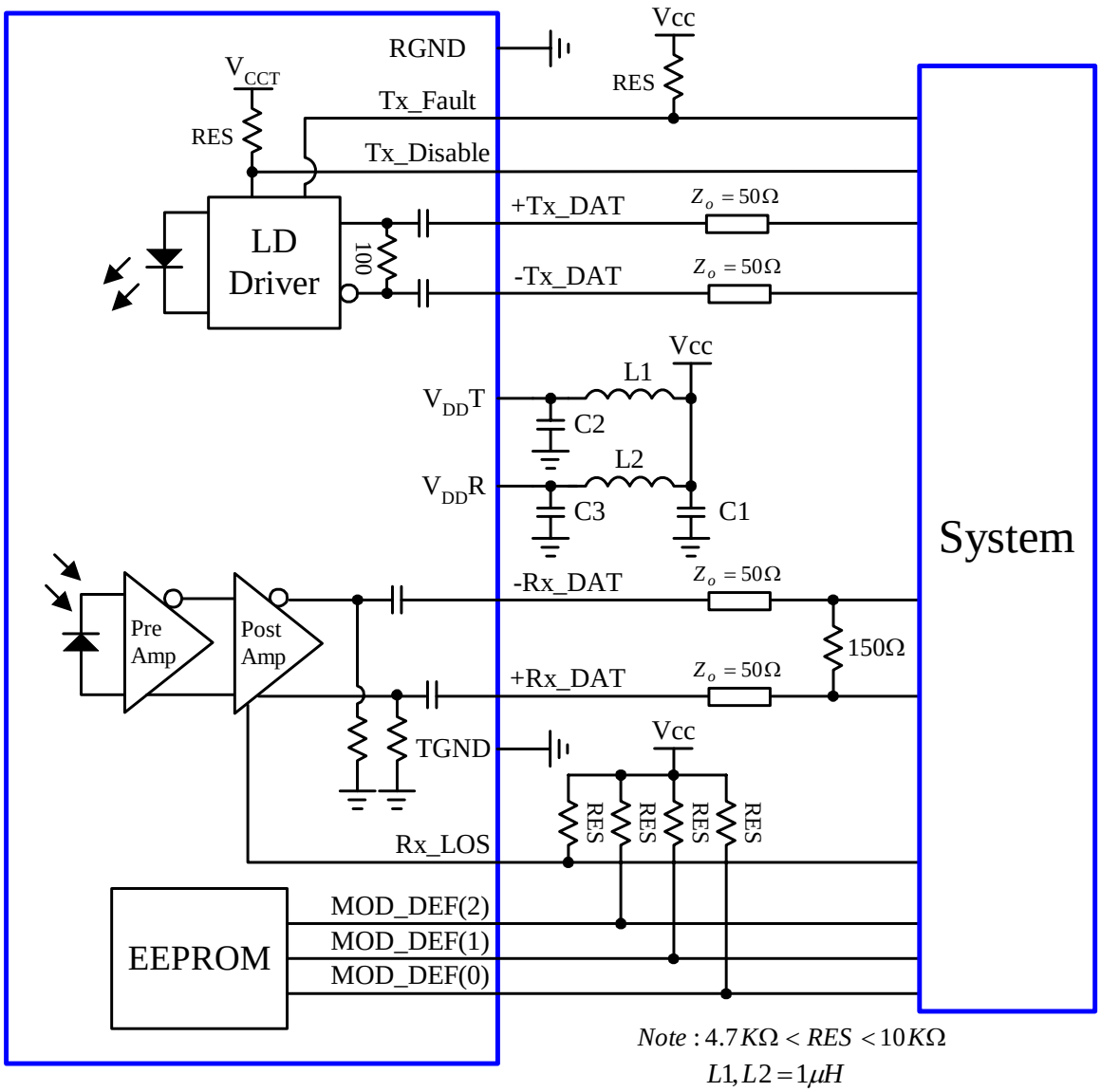

$Note: 4.7K\Omega < RES < 10K\Omega$

$L1, L2 = 1\mu H$

$C1 = 10\mu F$

$C2, C3 = 0.1\mu F$

AIBAO reserves the right to make changes in the specification described hereinafter without prior notice.

AIBAO INTERNATIONAL LTD.
No.77, Shengli 6th St., Jhubei City,
Hsinchu County 302, Taiwan R.O.C.
Tel: +886-3-657-6363 Fax: +886-3-657-6963
http://www.aibaotech.com

Dimensions (mm):

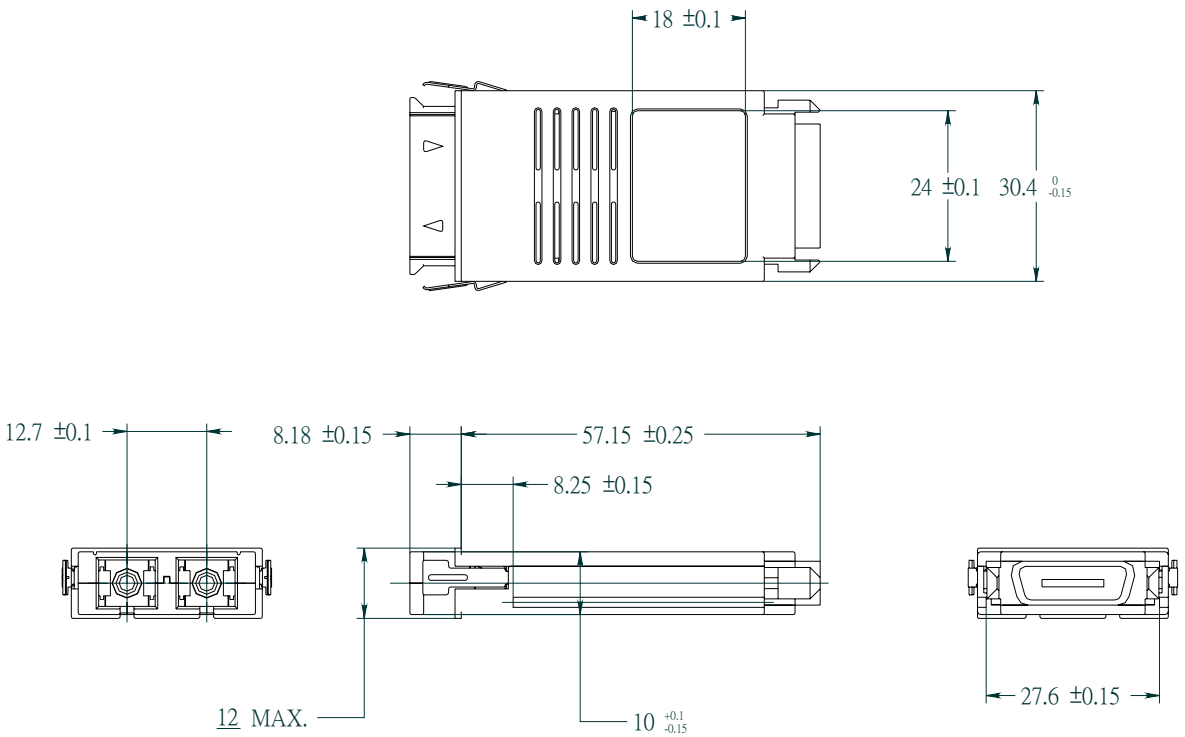

Safety Information

- All versions of this laser are Class 1 laser products per IEC* 60825-1:2001. Users should observe safety precautions such as those recommended by ANSI** Z136.1-2000, ANSI Z36.2-1997 and IEC 60825-1:2001.
- Caution: use of controls or adjustments or performance of procedures other than those specified herein may result in hazardous radiation exposure.

*IEC is a registered trademark of the International Electrotechnical Commission

**ANSI is a registered trademark of the American National Standards Institute

AIBAO reserves the right to make changes in the specification described hereinafter without prior notice.

AIBAO INTERNATIONAL LTD.
No.77, Shengli 6th St., Jhubei City,
Hsinchu County 302, Taiwan R.O.C.
Tel: +886-3-657-6363 Fax: +886-3-657-6963
http://www.aibaotech.com