Small Form Pluggable (GBE DWDM SFP DDMI)
ITU Grid 100GHz C band wavelength
80km transmission distance

AB-GLC-DWDM-xxxx-80
Ver. A

Feature

- ITU Grid 100GHz C-Band Wavelengths Compliant
- DWDM SFP MSA Compliant
- Digital Diagnostics Monitor
- IEEE 802.3ah Compliant
- APD Receiver
- 80km Reach
- RoHS Compliant
- Power dissipation <1.5W
- -5 to 70 C temperature range
- Cold Start Up Wavelength Compliance
- Class 1 Laser, 21CFR 1040.10/1040.11
- EN 60825-1/A1:2002 Compliant
- Bail Latch Color: WHITE

Absolute Maximum Rating

PARAMETER	SYMBOL	MIN	Typical	MAX	UNIT
Supply Voltage	Vcc	3.1	3.3	3.5	V
Total Current (BOL)	Icc	--	--	375	mA
Power Supply Noise Rejection[a]	PSR	100	--	--	mVp-p
Operating Case Temperature	Top	–5	--	70	°C
Storage Temperature	Tst	-40	--	85	°C
Data Rate	DR	--	1250	--	Mbps

a) 20Hz to 155MHz

AIBAO reserves the right to make changes in the specification described hereinafter without prior notice.

Aibaotech
AIBAO INTERNATIONAL LTD.
No.77, Shengli 6th St., Jhubei City,
Hsinchu County 302, Taiwan R.O.C.
Tel: +886-3-657-6363 Fax: +886-3-657-6963
http://www.aibaotech.com

Transmitter Specifications (Optical)

PARAMETER	SYMBOL	MIN	Typical	MAX	UNIT
Optical Power	P_O	0	2	4	dBm
Average Launch Power (Tx:Off)	Poff	--	--	-45	dBm
Extinction Ratio	ER	8.2	--	--	dB
Eye Mask	IEEE 802.3, SONET/SDH compliant				
Optical Jitter Generation	Jgen(pk-pk)	--	--	0.07	UI
Optical Rise Time[b]	tr	--	--	160	ps
Optical Fall Time[b]	tf	--	--	160-	ps
Channel Spacing	Δf	--	100	--	GHz
Deviation From Central Frequency, EOL	--	--	--	±12	GHz
Spectral Width (20dB)	$\Delta\lambda$	--	--	0.3	nm
Side Mode Suppression Ratio	SMSR	30	--	--	dB
Dispersion Penalty at specified distance[c]	dp	--	--	2	dB
Relative Intensity Noise	RIN	--	--	-135	dB/Hz
Reflection Tolerance[d]	rp	-24	--	--	dB

b) 20%-80% values

c) Measured at BER of 10^{-12}, 1.25Gb/s, at eye center. For AB-GLC-DWDM-xxxx-80, measured at 80km (1600ps/nm);

d) 2dB degradation of receiver sensitivity

Transmitter Specifications (Electrical)

PARAMETER	SYMBOL	MIN	Typical	MAX	UNIT
Input Differential Impedence	Rin	80	100	120	Ω
PECL Single-Ended Data Input Swing	Vin,p-p	250	--	1200	mV
TxFault_Fault	Vfault	2		Vcc	V
TxFault_Normal	Vnormal	Vee		Vee+0.5	V
TxDisable_Disable	Vd	2	--	Vcc	V
TxDisable_Enable	Ven	Vee	--	Vee+0.8	V

AIBAO reserves the right to make changes in the specification described hereinafter without prior notice.

AIBAO INTERNATIONAL LTD.
No.77, Shengli 6th St., Jhubei City,
Hsinchu County 302, Taiwan R.O.C.
Tel: +886-3-657-6363 Fax: +886-3-657-6963
http://www.aibaotech.com

Receiver Specifications (Optical)

PARAMETER	SYMBOL	MIN	Typical	MAX	UNIT
Receive Power Low[e]	Rsens,low	-	-30	-28	dBm
Receive Power High	Rsens,high	-6	--	-	dBm
Damage Threshold For Receiver	Pin,damage	4	--	-	dBm
Wavelength	λ	1528	--	1564	nm
Maximum Reflectance Of Receiver	RX_r	-	--	-27	dB
LOS Assert	--	-38	--	-	dBm
LOS De-Assert	--	-	--	-28	dBm
LOS Hysteresis	--	0.5	--	-	dB

e) at 10^{-12} BER, 1.25Gb/s, 1310nm to 1610nm received wavelength. At wavelength ranges of 1260nm to 1310nm and 1610nm to 1620nm, maximum sensitivity penalty is 1dB

Receiver Specificatioins (Elelctrical)

PARAMETER	SYMBOL	MIN	Typical	MAX	UNIT
Single-Ended Data Output	Vout, p-p	185	--	800	mV
Data Output Rise Time	t_r	--	--	175	ps
Data Output Fall Time	t_f	--	--	175	ps

Diagnostics

PARAMETER	RANGE	ACCURACY	Unit
Temperature	-5 to 70	± 3	° C
Voltage	0 to Vcc	0.1	V
Bias Current	0 to 120	5	mA
TX Power	0 to 4	±2	dBm
RX Power	-28 to -6	±2	dBm
TEC Current	-1200 to 1200	±60	mA
TEC Temperature[f]	20 to 70	±0.25	ºC

f) Relative accuracy.Absolute accuracy is +/-3ºC

AIBAO reserves the right to make changes in the specification described hereinafter without prior notice.

AIBAO INTERNATIONAL LTD.
No.77, Shengli 6th St., Jhubei City,
Hsinchu County 302, Taiwan R.O.C.
Tel: +886-3-657-6363 Fax: +886-3-657-6963
http://www.aibaotech.com

Timing and Electrical

PARAMETER	SYMBOL	MIN	Typical	MAX	UNIT
Tx Disable Negate Time	t_on	--	--	20	ms
Tx Disable Assert Time	t_off	--	--	20	ms
Time To Initialize After Reset of Tx_Fault/INT in Normal Operation	t_init	--	--	300	ms
Start-up Time	t_startup	--	--	90	secs
Tx Fault/INT Assert Time	t_fault	--	--	50	ms
Tx Disable To Reset	t_reset	10	--	-	μs
LOS Assert Time	t_loss_on	--	--	100	μs
LOS De-assert Time	t_loss_off	--	--	100	μs
Serial ID Clock Rate	f_serial_ck	--	--	100	kHz
RX_LOS Voltage (High)		2	--	-	V
RX_LOS Voltage (Low)		--	--	0.8	V
LOS Output Voltage-Fault	V_{LOS} fault	2	--	Vcc	V
LOS Output Voltage-Normal	V_{LOS}normal	Vee	--	Vee+0.55	V
MOD_DEF (0:2)-High	V_H	2	--	Vcc	V
MOD_DEF (0:2)-Low	V_L	Vee	--	Vee+0.5	V

Pin Assignment

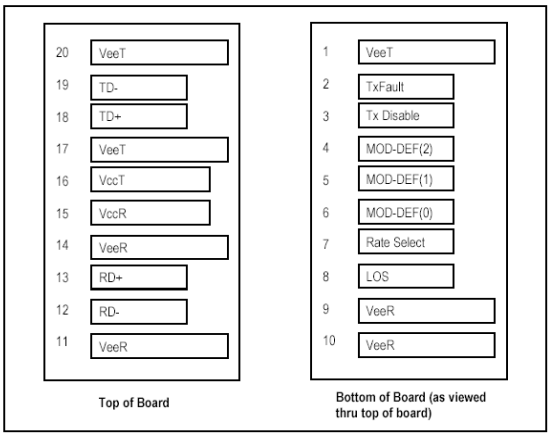

SFP Transceiver Electric Pad Layout

AIBAO reserves the right to make changes in the specification described hereinafter without prior notice.

AIBAO INTERNATIONAL LTD.
No.77, Shengli 6th St., Jhubei City,
Hsinchu County 302, Taiwan R.O.C.
Tel: +886-3-657-6363 Fax: +886-3-657-6963
http://www.aibaotech.com

Pin Function Definition

Pin Num.	Name	Function	Plug Seq.	Note
1	VeeT	Transmitter Ground	1	Note 7
2	Tx_Fault	Transmitter Fault Indication	3	Note 1
3	Tx_Disable	Transmitter Disable	3	Note 2 Module disables on high or open
4	MOD_DEF2	Module Definition 2	3	Note 3, 2 wire serial ID interface
5	MOD_DEF1	Module Definition 1	3	Note 3, 2 wire serial ID interface
6	MOD_DEF0	Module Definition 0	3	Note 3, Grounded in Module
7	NC	NC	3	No Connection
8	Rx_LOS	Loss of Signal	3	Note 4
9	VeeR	Receiver Ground	1	Note 7
10	VeeR	Receiver Ground	1	Note 7
11	VeeR	Receiver Ground	1	Note 7
12	RD-	Inv. Received Data Out	3	Note 5
13	RD+	Received Data Out	3	Note 5
14	VeeR	Receiver Ground	1	Note 7
15	VccR	Receiver Power	2	3.3 ± 5%, Note 6
16	VccT	Transmitter Power	2	3.3 ± 5%, Note 6
17	VeeT	Transmitter Ground	1	Note 7
18	TD+	Transmit Data In	3	Note 8
19	TD-	Inv. Transmit Data In	3	Note 8
20	VeeT	Transmitter Ground	1	Note 7

Note 1 : Tx_Fault is an open collector/drain output, which should be pulled up with a 4.7K – 10KΩ resistor on the host board. Pull up voltage between 2.0V and VccT, R+0.3V. When high, output indicates a laser fault of some kind. Low indicates normal operation. In the low state, the output will be pulled to < 0.8V.
Note 2: Tx_Disable is an input that is used to shut down the transmitter optical output. It is pulled up within the module with a 4.7 – 10 KΩ resistor.
Note 3: Mod-Def 0,1,2. These are the module definition pins. They should be pulled up with a 4.7K –10KΩ resistor on the host board.
Note 4: Rx_LOS (Loss of Signal) is an open collector/drain output, which should be pulled up with a 4.7K – 10KΩ resistor. Pull up voltage between 2.0V and VccT, R+0.3V. When high, this output indicates the received optical power is below the worst-case receiver sensitivity. Low indicates normal operation. In the low state, the output will be pulled to < 0.8V.
Note 5: These are the differential receiver outputs. They are AC coupled 100Ω differential lines which should be terminated with 100Ω (differential) at the user SERDES.
Note 6: VccR and VccT are the receiver and transmitter power supplies. They are defined as 3.3V ±5% at the SFP connector pin. Recommended host board power supply filtering is shown below.
Note 7: VeeR and VeeT may be internally connected within the SFP module.
Note 8: These are the differential transmitter inputs. They are AC-coupled, differential lines with 100Ω differential termination inside the module.

AIBAO reserves the right to make changes in the specification described hereinafter without prior notice.

AIBAO INTERNATIONAL LTD.
No.77, Shengli 6th St., Jhubei City,
Hsinchu County 302, Taiwan R.O.C.
Tel: +886-3-657-6363 Fax: +886-3-657-6963
http://www.aibaotech.com

Recommended Host Board Supply Filtering Network

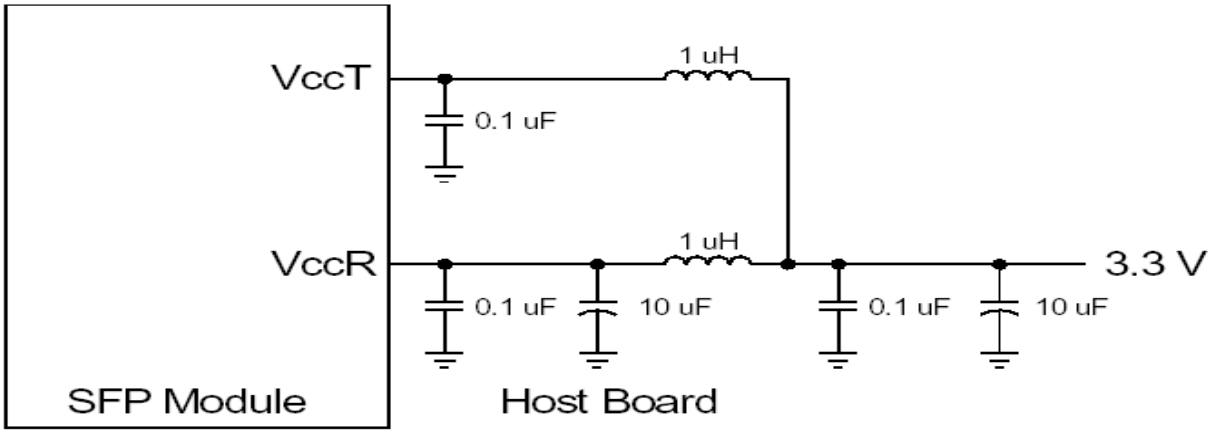

Suggest Transceiver / Host Interface

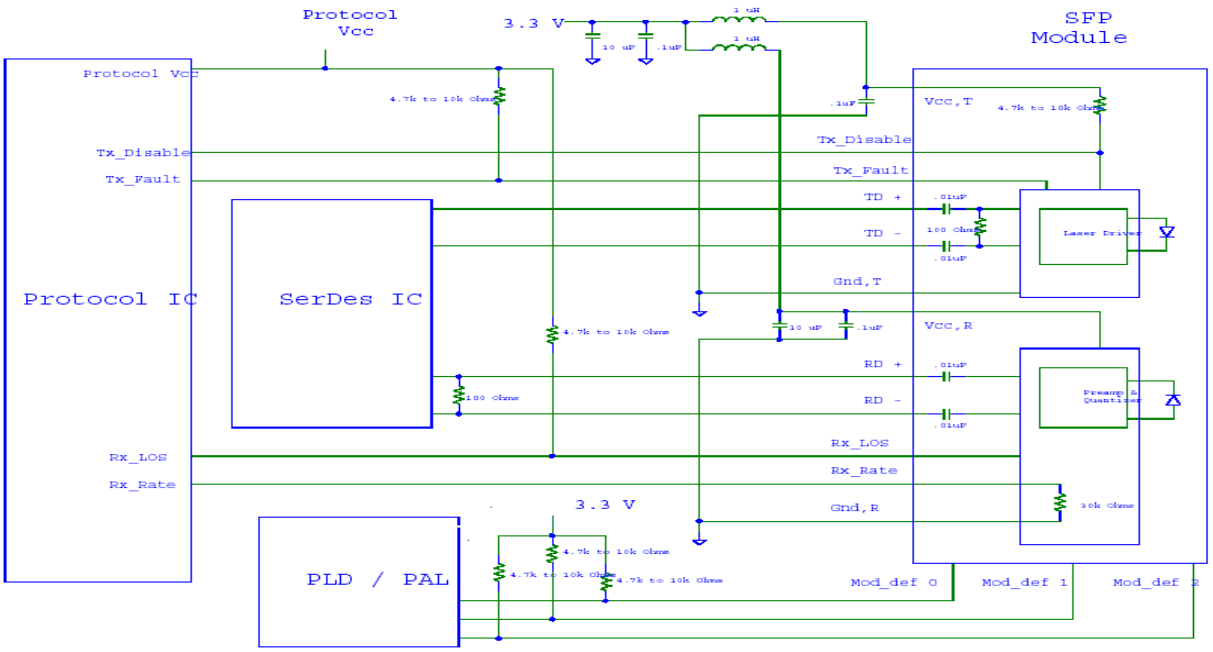

AIBAO reserves the right to make changes in the specification described hereinafter without prior notice.

AIBAO INTERNATIONAL LTD.
No.77, Shengli 6th St., Jhubei City,
Hsinchu County 302, Taiwan R.O.C.
Tel: +886-3-657-6363 Fax: +886-3-657-6963
http://www.aibaotech.com

Dimensions (mm)

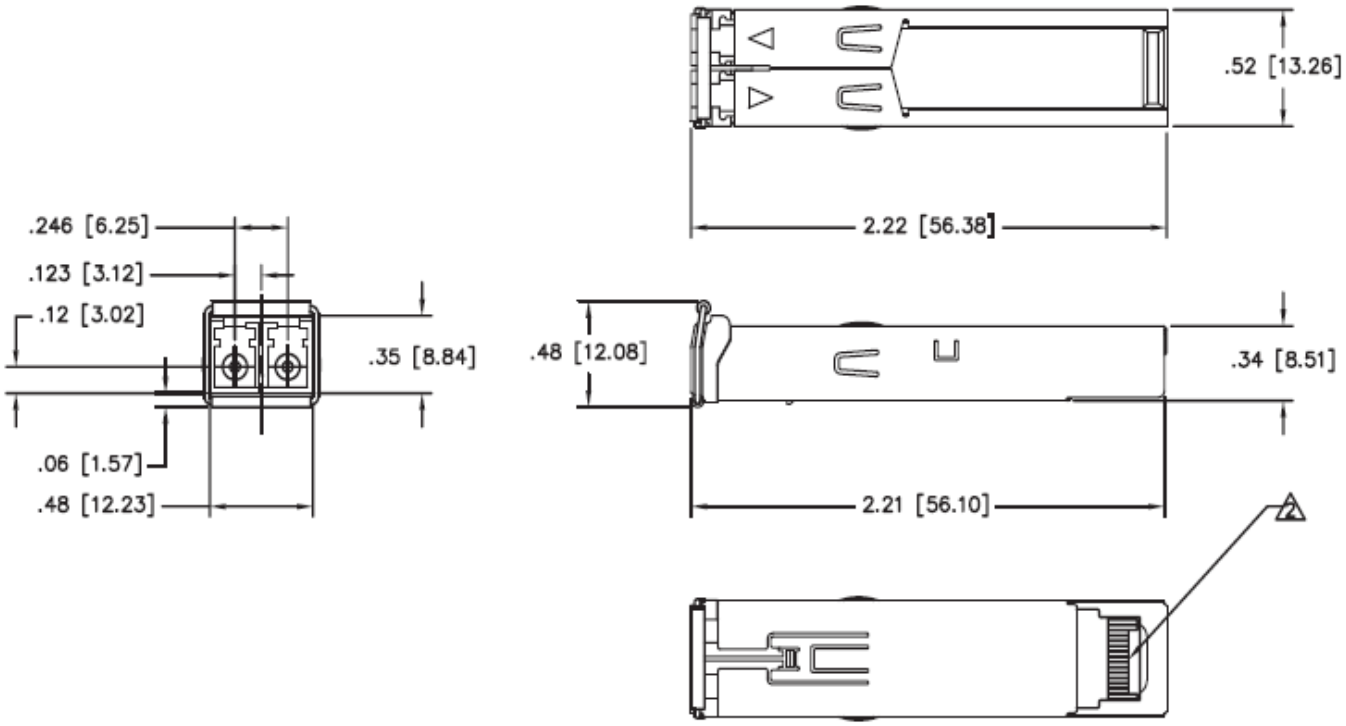

AIBAO reserves the right to make changes in the specification described hereinafter without prior notice.

AIBAO INTERNATIONAL LTD.
No.77, Shengli 6th St., Jhubei City,
Hsinchu County 302, Taiwan R.O.C.
Tel: +886-3-657-6363 Fax: +886-3-657-6963
http://www.aibaotech.com

Small Form Pluggable (GBE DWDM SFP DDMI)
ITU Grid 100GHz C band wavelength
80km transmission distance

AB-GLC-DWDM-xxxx-80
Ver. A

Order Information

Aibaotech Order No.	Bit Rate (b/s)	ITU Grid Ch. No.	Distance (Km)	Wavelength (nm)	Package & Function
AB-GLC-DWDM-2877-80	100M ~ 1.25G	CH61	SM - 80	1528.77	2 core LC SFP w/i DDMI
AB-GLC-DWDM-2955-80	100M ~ 1.25G	CH60	SM - 80	1529.55	2 core LC SFP w/i DDMI
AB-GLC-DWDM-3033-80	100M ~ 1.25G	CH59	SM - 80	1530.33	2 core LC SFP w/i DDMI
AB-GLC-DWDM-3112-80	100M ~ 1.25G	CH58	SM - 80	1531.12	2 core LC SFP w/i DDMI
AB-GLC-DWDM-3190-80	100M ~ 1.25G	CH57	SM - 80	1531.9	2 core LC SFP w/i DDMI
AB-GLC-DWDM-3268-80	100M ~ 1.25G	CH56	SM - 80	1532.68	2 core LC SFP w/i DDMI
AB-GLC-DWDM-3347-80	100M ~ 1.25G	CH55	SM - 80	1533.47	2 core LC SFP w/i DDMI
AB-GLC-DWDM-3425-80	100M ~ 1.25G	CH54	SM - 80	1534.25	2 core LC SFP w/i DDMI
AB-GLC-DWDM-3504-80	100M ~ 1.25G	CH53	SM - 80	1535.04	2 core LC SFP w/i DDMI
AB-GLC-DWDM-3582-80	100M ~ 1.25G	CH52	SM - 80	1535.82	2 core LC SFP w/i DDMI
AB-GLC-DWDM-3661-80	100M ~ 1.25G	CH51	SM - 80	1536.61	2 core LC SFP w/i DDMI
AB-GLC-DWDM-3740-80	100M ~ 1.25G	CH50	SM - 80	1537.40	2 core LC SFP w/i DDMI
AB-GLC-DWDM-3819-80	100M ~ 1.25G	CH49	SM - 80	1538.19	2 core LC SFP w/i DDMI
AB-GLC-DWDM-3898-80	100M ~ 1.25G	CH48	SM - 80	1538.98	2 core LC SFP w/i DDMI
AB-GLC-DWDM-3977-80	100M ~ 1.25G	CH47	SM - 80	1539.77	2 core LC SFP w/i DDMI
AB-GLC-DWDM-4056-80	100M ~ 1.25G	CH46	SM - 80	1540.56	2 core LC SFP w/i DDMI
AB-GLC-DWDM-4135-80	100M ~ 1.25G	CH45	SM - 80	1541.35	2 core LC SFP w/i DDMI
AB-GLC-DWDM-4214-80	100M ~ 1.25G	CH44	SM - 80	1542.14	2 core LC SFP w/i DDMI
AB-GLC-DWDM-4294-80	100M ~ 1.25G	CH43	SM - 80	1542.94	2 core LC SFP w/i DDMI
AB-GLC-DWDM-4373-80	100M ~ 1.25G	CH42	SM - 80	1543.73	2 core LC SFP w/i DDMI
AB-GLC-DWDM-4453-80	100M ~ 1.25G	CH41	SM - 80	1544.53	2 core LC SFP w/i DDMI
AB-GLC-DWDM-4532-80	100M ~ 1.25G	CH40	SM - 80	1545.32	2 core LC SFP w/i DDMI
AB-GLC-DWDM-4612-80	100M ~ 1.25G	CH39	SM - 80	1546.12	2 core LC SFP w/i DDMI
AB-GLC-DWDM-4692-80	100M ~ 1.25G	CH38	SM - 80	1546.92	2 core LC SFP w/i DDMI
AB-GLC-DWDM-4772-80	100M ~ 1.25G	CH37	SM - 80	1547.72	2 core LC SFP w/i DDMI
AB-GLC-DWDM-4851-80	100M ~ 1.25G	CH36	SM - 80	1548.51	2 core LC SFP w/i DDMI
AB-GLC-DWDM-4932-80	100M ~ 1.25G	CH35	SM - 80	1549.32	2 core LC SFP w/i DDMI
AB-GLC-DWDM-5012-80	100M ~ 1.25G	CH34	SM - 80	1550.12	2 core LC SFP w/i DDMI

AIBAO reserves the right to make changes in the specification described hereinafter without prior notice.

AIBAO INTERNATIONAL LTD.
No.77, Shengli 6th St., Jhubei City,
Hsinchu County 302, Taiwan R.O.C.
Tel: +886-3-657-6363 Fax: +886-3-657-6963
http://www.aibaotech.com

AB-GLC-DWDM-5092-80	100M ~ 1.25G	CH33	SM - 80	1550.92	2 core LC SFP w/i DDMI
AB-GLC-DWDM-5172-80	100M ~ 1.25G	CH32	SM - 80	1551.72	2 core LC SFP w/i DDMI
AB-GLC-DWDM-5252-80	100M ~ 1.25G	CH31	SM - 80	1552.52	2 core LC SFP w/i DDMI
AB-GLC-DWDM-5333-80	100M ~ 1.25G	CH30	SM - 80	1553.33	2 core LC SFP w/i DDMI
AB-GLC-DWDM-5413-80	100M ~ 1.25G	CH29	SM - 80	1554.13	2 core LC SFP w/i DDMI
AB-GLC-DWDM-5494-80	100M ~ 1.25G	CH28	SM - 80	1554.94	2 core LC SFP w/i DDMI
AB-GLC-DWDM-5575-80	100M ~ 1.25G	CH27	SM - 80	1555.75	2 core LC SFP w/i DDMI
AB-GLC-DWDM-5655-80	100M ~ 1.25G	CH26	SM - 80	1556.55	2 core LC SFP w/i DDMI
AB-GLC-DWDM-5736-80	100M ~ 1.25G	CH25	SM - 80	1557.36	2 core LC SFP w/i DDMI
AB-GLC-DWDM-5817-80	100M ~ 1.25G	CH24	SM - 80	1558.17	2 core LC SFP w/i DDMI
AB-GLC-DWDM-5898-80	100M ~ 1.25G	CH23	SM - 80	1558.98	2 core LC SFP w/i DDMI
AB-GLC-DWDM-5979-80	100M ~ 1.25G	CH22	SM - 80	1559.79	2 core LC SFP w/i DDMI
AB-GLC-DWDM-6061-80	100M ~ 1.25G	CH21	SM - 80	1560.61	2 core LC SFP w/i DDMI
AB-GLC-DWDM-6142-80	100M ~ 1.25G	CH20	SM - 80	1561.42	2 core LC SFP w/i DDMI
AB-GLC-DWDM-6223-80	100M ~ 1.25G	CH19	SM - 80	1562.23	2 core LC SFP w/i DDMI
AB-GLC-DWDM-6305-80	100M ~ 1.25G	CH18	SM - 80	1563.05	2 core LC SFP w/i DDMI
AB-GLC-DWDM-6386-80	100M ~ 1.25G	CH17	SM - 80	1563.86	2 core LC SFP w/i DDMI

Safety Information

- All versions of this laser are Class 1 laser products per IEC* 60825-1:2001. Users should observe safety precautions such as those recommended by ANSI** Z136.1-2000, ANSI Z36.2-1997 and IEC 60825-1:2001.
- Caution: use of controls or adjustments or performance of procedures other than those specified herein may result in hazardous radiation exposure.

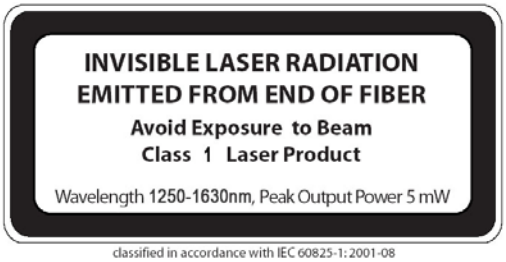

classified in accordance with IEC 60825-1: 2001-08

*IEC is a registered trademark of the International Electrotechnical Commission

**ANSI is a registered trademark of the American National Standards Institute

AIBAO reserves the right to make changes in the specification described hereinafter without prior notice.

AIBAO INTERNATIONAL LTD.
No.77, Shengli 6th St., Jhubei City,
Hsinchu County 302, Taiwan R.O.C.
Tel: +886-3-657-6363 Fax: +886-3-657-6963
http://www.aibaotech.com